AN EVALUATION OF WOOD WASTE ENERGY CONVERSION SYSTEMS

B. H. LEVELTON & ASSOCIATES LTD.

LEGISLATIVE LIBRARY
VICTORIA, B.C.

AN EVALUATION OF
WOOD-WASTE ENERGY CONVERSION SYSTEMS

Commissioned by

The British Columbia Wood Waste Energy Co-Ordinating Committee

Funded by

British Columbia Energy Commission
1177 West Hastings Street
Vancouver, B.C. V6E 2K3

Council of Forest Industries of British Columbia
1055 West Hastings Street
Vancouver, B.C. V6E 2E9

Department of Energy, Mines and Resources
Renewable Energy Resources Branch
580 Booth Street
Ottawa, Ontario K1A 0E4

Prepared by

B.H. Levelton & Associates Ltd.
1755 West 4th Avenue
Vancouver, B.C. V6J 1M2

Printed by

Environment Canada
Western Forest Products Lab.
6620 N.W. Marine Drive
Vancouver, B.C. V6T 1X2

B.H. Levelton, P.Eng.
D.V. O'Connor, P.Eng.

31 March 1978

TABLE OF CONTENTS

	Page
1. INTRODUCTION	1
A. Scope	1
B. Acknowledgements	2
C. Disclaimer	3
2. SUMMARY AND FINDINGS	4
A. Equipment and Systems Demonstrating Proven Technology	4
B. Applications in the Forest Industry Where Fossil Fuels Can be Replaced	8
C. Selection of Equipment and Systems for Specific Sites	10
D. Sizing of Wood-Waste-Fired Systems	12
E. Application Matrix	13
3. APPLICATIONS IN THE FOREST INDUSTRY WHERE FOSSIL FUELS MAY BE REPLACED	23
A. Lumber Dry Kilns	23
(1) General	23
(2) How Lumber Dries in Kilns	23
(3) Types of Kilns in Use	25
(4) Heat Required to Dry Lumber	29
(5) Effect of Kiln Schedule on Heat Demand	30
(6) Implications of Replacing Fossil Fuels with Wood Waste Energy on Kiln Operation	33
(7) Potential Use of Alternate Fuels in British Columbia Lumber Kilns	37

TABLE OF CONTENTS (Continued) Page

B. Veneer Dryers ---------- 38

(1) General ---------- 38

(2) Construction and Operation of Veneer Dryers ---------- 39

(3) Energy Consumption in Veneer Dryers ---------- 40

(4) Quality of Flue Gas Required in Veneer Dryers -------- 41

(5) Potential Use of Alternate Fuels in British Columbia Veneer Dryers ---------- 42

C. Log Conditioning Vats ---------- 43

(1) General ---------- 43

(2) Operation of Log Conditioning Vats ---------- 44

(3) Amount of Energy Used in Log Vats ---------- 44

(4) Requirements of Heat Energy Supplied to Vat---------- 45

D. Lime Kilns ---------- 46

(1) Energy Load in Lime Kilns ---------- 46

(2) Temperatures Required for Calcination ---------- 46

(3) Feasibility of Using Wood for Firing a Lime Kiln ---------- 48

(4) Considerations in Firing Lime Kilns with Wood or Wood Gas ---------- 50

E. Space Heating ---------- 54

F. Motor Generator Units ---------- 56

(1) Diesel Engine - Electric Generator Units ---------- 56

(2) Gas Turbine - Electric Generating Units ---------- 57

G. General Drying Duty ---------- 58

(1) Direct-Fired Drying ---------- 58

(2) Indirect Fired Drying ---------- 59

TABLE OF CONTENTS (Continued) Page

H. Power Boilers ---------- 59

(1) Potential Applications ---------- 59

(2) Potential Replacement of Fossil Fuels in Power Boilers ---------- 61

I. Heating Process Fluids ---------- 61

J. The Industry in British Columbia ---------- 62

Case 1 - Sawmill Cutting 100,000 fbm Daily ---------- 62

(1) Waste Production ---------- 62

(2) Heat Required in Dry Kilns ---------- 63

(3) Total Energy Requirements of Sawmill (including electrical energy) ---------- 63

Case 2 - Plywood Mill Producing 150 million sq. ft. of 3/8-inch Equivalent per Year ---------- 64

(1) Waste Production ---------- 64

(2) Heat Required in Veneer Dryers ---------- 64

(3) Total Energy Requirements ---------- 65

4. CLASSES OF SYSTEMS AVAILABLE FOR RECOVERY OF ENERGY FROM WOOD WASTE ---------- 66

A. Suspension Burners ---------- 66

B. Fluid Bed Combustors ---------- 66

C. Multiple Chamber Combustors ---------- 67

D. Single Chamber Combustors ---------- 67

E. Packaged Boilers ---------- 68

F. Gasification ---------- 68

G. Pyrolysis ---------- 70

H. Alcohol Production from Wood Residues ---------- 71

(1) Bacterial Fermentation ---------- 71

(2) Pyrolysis and Catalyzed Chemical Reactions for Producing Methanol ---------- 71

I. Wood Densification ---------- 74

TABLE OF CONTENTS (Continued) Page

5. CRITERIA FOR EVALUATING SYSTEMS ---------- 75

A. State of Development of Technology ---------- 75
B. Fuel Quality Required ---------- 76
C. Properties of Energy Produced ---------- 76
D. Recovery of Potential Energy in Wood Waste ---------- 77
E. Environmental Acceptability ---------- 77
F. Flexibility of Operation ---------- 77
G. Suitability for Use in Forest Products Industry ---------- 79
H. Capital Cost ---------- 79
I. Operating Costs ---------- 80
J. Life of Process or Equipment ---------- 80

6. EVALUATION OF SYSTEMS ---------- 81

A. Suspension Burners ---------- 81

(1) Energex ---------- 81
(2) Waycot Systems Ltd. ---------- 86
(3) Coen Company ---------- 90
(4) Peabody Gordon-Piatt ---------- 93
(5) Guaranty Performance Co. Inc. ---------- 95

B. Fluid-Bed Combustors ---------- 97

(1) Energy Products of Idaho Inc. - Fluid Flame ---------- 99
(2) Incinergy Systems Ltd. ---------- 103
(3) Combustion Power Company Inc. ---------- 105
(4) Johnson Boiler Company Inc. ---------- 109
(5) Copeland Systems Inc. ---------- 109
(6) Dorr-Oliver Inc. ---------- 110

C. Multiple-Chamber Combustors ---------- 110

(1) Basic Environmental Engineering, Inc. ---------- 110
(2) Consumat Systems, Inc. ---------- 113

TABLE OF CONTENTS (Continued) Page

(3) Lamb-Cargate Wet Cell Burner ---------- 115
(4) Envirometrix Systems ---------- 119
(5) Anga & Värme A.B. ---------- 121
(6) Berg and Starck A.B. ---------- 123
(7) Konus-Kessel ---------- 125

D. Single-Chamber Combustors ---------- 128

(1) Enertherm, Inc. ---------- 128
(2) Olivine Corporation ---------- 133
(3) Lochhead-Haggerty Engineering & Manufacturing Co. Ltd. ---------- 134
(4) Irvington-Moore ---------- 137

E. Packaged Power Boilers ---------- 138

(1) Wellons Inc. ---------- 138
(2) Ray Burner Company ---------- 141
(3) Gebr Weiss Boiler Co. ---------- 143
(4) Babcock and Wilcox Ltd. ---------- 144

F. Gasification ---------- 144

(1) Westwood Polygas Ltd. ---------- 144
(2) B.C. Research ---------- 149
(3) Mellenger Gasodyne ---------- 153
(4) Forest Fuels Inc. ---------- 155
(5) Andco-Torrax ---------- 156
(6) Union Carbide - Conversion of Solid Waste by Gasification, Purox Process ---------- 159
(7) Bio-Solar Research and Development Corp. (Woodex) ---------- 164
(8) Canadian Industries Limited ---------- 165
(9) University of California at Davis ---------- 166
(10) Eugene Water and Electric Board ---------- 168

TABLE OF CONTENTS (Continued) Page

G. Pyrolysis ---------- 168

(1) Tech-Air Corporation ---------- 168

(2) Alberta Industrial Developments Ltd. ---------- 170

(3) Occidental Research ---------- 172

(4) United States Bureau of Mines ---------- 177

H. Wood Densification Processes ---------- 179

(1) Pres-to-Log process, Lewiston Wood Briquetting Co. In. ---------- 179

(2) Woodex Process - Bio-Solar Research and Development Corporation ---------- 179

(3) Guaranty Performance Co. Inc. ---------- 180

APPENDIX A - Names and Addresses of Manufacturers ---------- 181

APPENDIX B - Bibliography ---------- 187

TERMINOLOGY AND ABBREVIATIONS

1. General

Throughout this report the existing English system of units has been used. It was felt that conversion to metric units might be confusing to the mill operators who have not yet been fully exposed to the metric system.

The use of such letters as "M" and "C" to designate 1000 and 100, respectively, has been avoided. While they are widely used in the forest industry, at times they may cause confusion. Accordingly, numbers are written out completely where space permits.

2. Expression of Moisture Content

Moisture content (mc) of wood may be expressed as either total-weight basis (sometimes called wet basis) or dry basis. Since both are used in the forest industry, it is well to understand precisely what each means.

Percentage mc total weight basis =

$$\frac{\text{Wt. of wet sample - wt. of dried sample} \times 100}{\text{Wt. of wet sample}}$$

Percentage mc dry basis =

$$\frac{\text{Wt. of wet sample - wt. of dried sample}}{\text{Wt. of dry sample}} \times 100$$

The relation between the two expressions is shown in Figure A-1. Note that moisture content on a dry basis can exceed 100 percent

Moisture Content Comparison

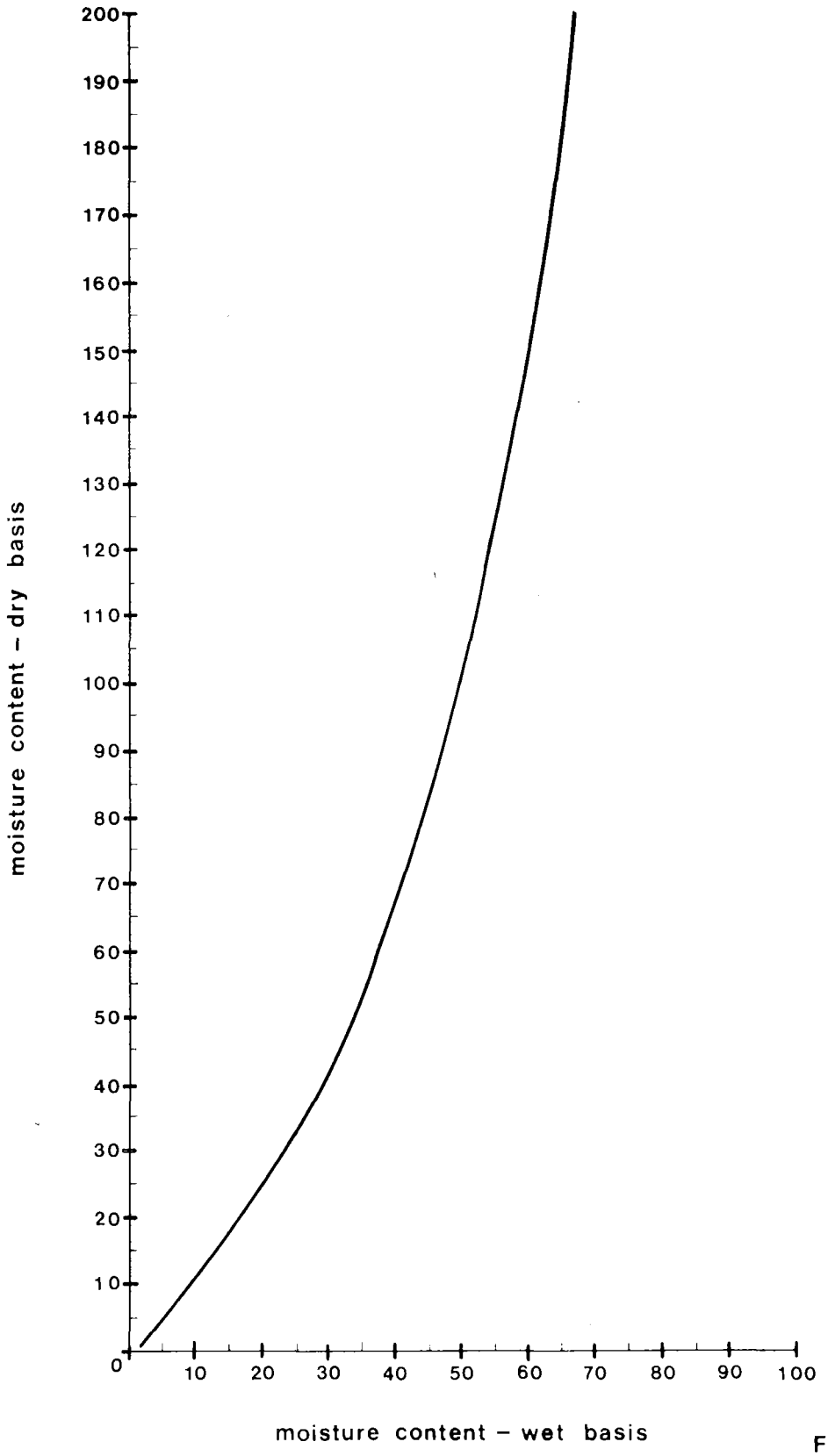

Figure A-1

because it represents weight of water per weight of dry wood. Throughout this report the total weight basis is used except as noted.

3. Heat Requirements for Drying

   (a) For lumber in dry kilns (typical average)
   1.5 million Btu per 1000 fbm

   (b) For veneer in dryers (typical average)
   300,000 Btu per 1000 sq. ft. 1/8-inch thick material
   900,000 Btu per 1000 sq. ft. 3/8-inch thick material

4. Abbreviations and Terms

ADT	-	air-dried ton (of pulp)
BD	-	bone dry, i.e. no moisture content
Boiler hp	-	41,844 Btu/hour input
Btu	-	British thermal unit
Barrel	-	barrel of 35 Imperial gallons
Cunit	-	100 cu. ft. of solid wood
cu.ft.	-	cubic foot
CO_2	-	carbon dioxide
cfm	-	cubic feet per minute
EPA	-	Environmental Protection Agency, U.S.
EPS	-	Environmental Protection Service, Department of Environment, Canada
fbm	-	feet board measure. One fbm is a volume of solid wood one square foot in area by one inch thick, or 0.0833 cu.ft.
gal	-	gallon (Imperial measures used in report)
GPU	-	gravity packed unit, a forest-industry term describing volume measurement of loose wood residue (see "unit" below)
gr	-	grains. One grain is $\frac{1}{7000}$ of a pound
gr per sdcf	-	grains per standard dry cubic foot, a particulate emission measurement

hp	- horsepower
hv	- heating value or heat of combustion
hv (gross)	- gross or higher heating value, the value used throughout the report
hv (net)	- net or lower heating value, rarely used
in.	- inches
in. of water	- inches of water, a term used in measuring pressure or pressure drop in which the reading in a water filled manometer is used
kw	- kilowatt
kwh	- kilowatt hour
lb.	- pound
lb. steam/hour	- steam boiler rating
LPG	- liquified petroleum gas, usually propane or propane plus butane
PCB	- Pollution Control Branch
ppm	- parts per million (by weight or volume)
psia	- pounds per square inch, usually as an absolute value
psig	- pounds per square inch gauge, or pressure as read on a pressure gauge
SWE	- solid wood equivalent (as of sawdust, etc.)
TPH	- tons per hour (short ton)
TPD	- tons per day
TPY	- tons per year
TCF	- trillion cubic feet, a term not used in general in this report (one trillion = 1×10^{12})
unit	- 200 cubic feet of loose wood residue, such as hog fuel, sawdust, etc.
10^3	- 1,000
10^6	- 1,000,000 (one million)
10^9	- 1,000,000,000 (one billion)
10^{12}	- 1,000,000,000,000 (one trillion)
3/8 inch equivalent	- plywood quantities are commonly reduced to an equivalent area 3/8 inches thick
1/8 inch equivalent	- veneer quantities are commonly reduced to an equivalent area 1/8 inches thick

1. INTRODUCTION

A. Scope

The British Columbia Wood Waste Energy Co-Ordinating Committee has been formed to evaluate the potential for increased use of wood waste as an energy source in British Columbia. As part of this program, the committee has commissioned a study of the technology available for recovering energy from wood waste and an evaluation of the merits of the various systems available for energy recovery.

The terms of reference of the study may be summarized as follows:

1. Identify potential applications in the forest-products industry for wood-waste fuels to displace fossil fuels. Conventional hog-fuel boilers are specifically excluded except where supplementary firing by fossil fuels can be supplanted by wood fuel.
2. Identify and assess the relative merits of the various classes of systems for wood energy conversion.
3. Identify and evaluate specific existing commercial and pilot-scale systems for wood-energy conversion with emphasis on all possible end uses of each system.

The study will encompass only the utilization of available wood wastes to replace fossil fuel used in the forest industry. The study will not be concerned specifically with identification of quantities and location of wood wastes, nor with methods for harvesting or gathering wood wastes, such as tree slashings and over-mature timber. However, it is obvious that any system or process which can utilize sawmill wastes likely will also be capable of using any other waste woody material.

The applications of technology will be within British Columbia, but the sources of technology will not be limited as long as the systems and processes resulting from the study can find use in the province. The study will not be limited to what is available now, but it will look beyond the present to establish what technology is being developed and what the requirements for fossil fuel replacement might be. There will be no restriction on how wood waste may be utilized nor in the form of energy derived from wood, other than the obvious exclusion of combustion of hog fuel in conventional steam boilers.

The study will confine itself to those applications where wood can replace fossil fuels in individual mill operations. A separate study of co-generation of steam and electrical energy from wood waste in central plants has been commissioned.

B. Acknowledgements

The authors wish to acknowledge the contributions to the study made by their associate consultants. Mr. H.R. Wright, P.Eng. provided data on energy use and requirements in lime kilns and in supplementary burners for hog-fuel boilers. Mr. J. Bachrich was responsible for theory and practice in lumber dry kilns and also visited installations of a number of the systems for converting wood waste to energy.

Information and guidance were provided by many people associated with the forest-products industry, and the authors wish to thank all for their assistance and forbearance. In particular, the aid provided by the following is recognized:

Dr. R. Evans, P.Eng.	- B.C. Energy Commission
Mr. D. Shay, P.Eng.	- B.C. Energy Commission
Dr. S. Evans and staff	- Western Forest Products Laboratory
Mr. P. Hrushowy and staff	- Council of the Forest Industries of B.C.

Mr. H. Klassen, P.Eng.	-	Pollution Control Branch of B.C.
Mr. I. Barber	-	Triangle Pacific Forest Products Ltd.
Mr. R. Henderson	-	Weldwood of Canada Ltd.
Dr. R. Overend	-	Department of Energy, Mines and Resources
Mr. N. Springate, P.Eng.	-	Norman Springate and Associates International Ltd.

The study could not have been completed without the cooperation of equipment and systems suppliers and of mill operators. These are too numerous to be listed here, but their contribution is acknowledged.

C. Disclaimer

The data and findings presented herein are based on the best information made available to B.H. Levelton & Associates Ltd. by equipment manufacturers and suppliers. Where possible, data have been evaluated critically, but the wide range of processes and equipment available and the relatively short period of time allotted to the study prohibited detailed analysis of all systems. While the information given herein is believed to be correct and representative of the processes and equipment described, B.H. Levelton & Associates Ltd. cannot guarantee its accuracy.

The findings presented in this report are based on the opinions of B.H. Levelton & Associates Ltd. and do not represent policy or position of the B.C. Wood Waste Co-ordinating Committee.

2. SUMMARY AND FINDINGS

A. Equipment and Systems Demonstrating Proven Technology

Those units which will be of the most interest to the forest-products industry in B.C. because of their state of development and potential are listed below with brief comments on their performance.

(1) Suspension Burners

(a) Energex - Requires dry fuel, preferably minus 8-mesh in size. Proven in use throughout North America, primarily on dry kilns and veneer dryers.

(b) Coen - Requires dry finely pulverized fuel, minus 1/16 inch and preferably minus 1/32 inch. Proven in use on boilers, rotary dryers, dry kilns, etc.

(c) Waycot - Preferably uses dry minus 8-mesh fuel, but it is claimed to operate on wet fine fuel also. Three units only have been operated.

(2) Fluid-Bed Combustors

(a) Energy Products of Idaho, "Fluid Flame" - Proven by use in the United States and Canada. Demonstrated to be suitable for total-energy recovery systems in sawmills. Can accept dry or wet material in a range of sizes, including chunks of wood.

(b) CPC Unit - Not fully proven in handling difficult wastes, but problems may be associated with very poor fuel being used.

(c) Copeland Unit - Used as an incinerator for some years, but it appears to have operating problems when fed difficult wastes. It should be

satisfactory when handling clean wood waste, but no operating data have been made available.

(3) Multiple Chamber Combustors

(a) Konus-Kessel Unit - Proven in Europe but only now entering North America. Normally used as a complete energy source, commonly using oil as the hot fluid for transporting heat. In some ways, it and the two following units resemble special hog-fuel boilers.

(b) Anga & Värme A.B. Unit - The company has long experience in bark and wood furnaces, but no installations have been made in North America. The unit handles waste from dry to 65% mc hogged to minus 4-inch size. Commonly used for steam generation.

(c) Berg and Starck A.B. - The company has long experience in wood and bark burning and is now entering the Canadian market. The unit is similar to the Anga & Värme unit.

(d) Lamb-Cargate Wet Cell - This unit shows considerable promise in handling both dry and wet fuels in its first commercial installation. It handles fine and large material. Field experience is limited and the unit's performance should be watched closely. It is tentatively rated as proven technology on the basis of its performance at Plateau Sawmills.

(e) Consumat Unit - The Consumat line has not been well proven on wood wastes, although the units have performed well on domestic wastes. At this time it does not appear to be a serious contender for mill use.

(f) Basic Environmental Engineering Unit - The unit appears well established, but has not been promoted for wood waste. It is limited to feed with 43% m.c. (wet basis).

(4) Single-Chamber Combustors

(a) Enertherm Inc. Unit - This unit has been used primarily for disposal of wood waste by incineration. Seven units in operation have performed well. To date, only minimal efforts have been made for energy recovery. Very low cost. The combustion technology is proven, but the energy recovery technology is not yet proven.

(b) Olivine Corporation Unit - Similar to the Enertherm unit, but using a cast refractory concrete construction. Thirty-five units are claimed to have been sold. Energy recovery has not been stressed.

(5) Packaged Power Boilers

(a) Wellons, Inc. Boilers - Designed to handle fuel up to 50% m.c. (wet basis) less than 3 inches in size. Fully automated operation is claimed. Some 60 units have been installed in North America. These are basically similar to Dutch-oven boilers.

(b) Ray Burner Co. Boilers - These are unique in firing pulverized dry wood waste in fire-tube boilers. High efficiency, good flexibility and completely automated. Well proven in forest-products industry where it frequently replaces a gas-fired boiler.

(c) Gebr Weiss Boiler Co. - Proven operation in North America for smaller boilers. Usually designed specifically for a given application.

(6) Gasification

It is the finding of this study that there is no proven gasification system for wood waste. The Mellenger Gasodyne Crossley unit has been proven in operation in years past, but its utility in the modern forest industry has not been demonstrated at this time. The Westwood Polygas system is in a commercial prototype stage, and is of interest to the industry in that it is available for viewing in B.C. and is operating on typical sawmill waste. The B.C. Research process is at a pilot stage with a prototype unit proposed for a location in Saskatchewan. This process will be watched with interest by those segments of the industry which require a combustible gas in their operation.

(7) Pyrolysis

(a) Tech Air Corporation - This unit is the closest approach found to proven technology, although it emphasizes charcoal production at the expense of gas and oil. It does not appear to be well suited to the forest industry.

(b) Alberta Industrial Thermax Unit - This unit is not proven reliable technology, but it does appear to have succeeded in balancing production of gas and charcoal to suit specific locations. It does not yield liquid product. It is worth observing closely in its development.

(c) Occidental Petroleum Inc. Unit - This system appears well on its way to be proven technology, but it is unlikely the company will make commitments for some time. Suitable only in large sizes (1000 tpd).

(8) Wood Densification

(a) Guaranty Fuels Inc. - Produces pellets from hogged dry wood. Economics are not favourable.

(b) Woodex - Produces pellets from hogged dry wood. Economics are not favourable.

(9) Alcohol Production

None of the processes is sufficiently advanced to permit an evaluation of use in the forest industry. The systems are generally suited only to large installations.

B. Applications in the Forest Industry where Fossil Fuels Can be Replaced

(1) Lumber Dry Kilns

This represents the major market for individual energy recovery systems. Direct firing with gases from suspension burners, multiple chamber combustors and fluid bed combustors is feasible and practical with no significant lumber degradation. Indirect firing through gas/oil and gas/water heat exchangers also are possible. Any sawmill drying lumber has more than adequate dry shavings to fire dry kilns.

(2) Veneer Dryers

Veneer dryers can be heated directly with combustion gases or indirectly with steam, oil and water heated by combustion gases.

Veneer quality is not impaired. Most plywood mills do not have adequate dry waste to fire dryers, although total waste for the purpose is available. Typically, suspension burners, fluid bed combustors and multiple chamber incinerators can be used.

(3) Log Vats

Log vats or conditioning vats can be heated with hot combustion gases in heat exchangers. The market is large and favours the use of smaller packaged units amenable to automation. Any of the suspension, multiple chamber, single chamber and fluid bed combustors can be used.

(4) Space Heat

Plants can be heated with steam, hot water or hot oil heated by exchange with any combustion gas. It appears desirable to combine space heating with other functions requiring thermal energy in which one system can provide the requisite energy.

(5) Boilers

Packaged boilers can be fired with a variety of fuels to replace gas-fired units. Control can be excellent, maintenance is minimal and little attention is required for operation.

(6) Heating of Process Liquids

All types of waste combustors can be used to heat various process fluids in heat exchangers.

(7) Lime Kilns

The potential for burning dry waste totally or in part

directly in lime kilns is large. Little data are available on the permissible substitution of waste for fossil fuel, but calculations suggest up to 50% replacement might be allowed. Wood gas could probably replace natural gas or oil with some de-rating of the kiln. Only those units burning the fuel directly in the kiln can be considered.

(8) Electrical Generation by Diesel Engine

Diesel electric generators can be fired with clean wood gas, although economics do not appear favourable.

C. Selection of Equipment and Systems for Specific Sites

Each potential application of a wood-waste-fired unit should be evaluated in depth prior to selecting a system. This report merely states what is available and where it may be used; the final selection depends on local conditions. Some of the factors to be considered are:

(1) The Total Waste Disposal Problem

The removal of the best fuel from the total waste produced results in decrease in burning quality of the residue. Thus, utilization of a fraction of the waste may lead to problems in disposing of the remainder, particularly where a teepee burner sized for the total waste flow is used.

Wherever possible it is preferable to select a waste utilization process which uses the majority of the waste to produce an energy form which can be used in a number of applications. This does not mean partial utilization is impractical, but that secondary effects should be assessed.

(2) Quality of Fuel

The quality of hot combustion gases and of combustible gas derived from wood depends on the wood quality. A high-ash wood leads to a high ash level in combustion gases. Thus the

use of dry comminuted wood for combustion and gasification does not necessarily lead to acceptably clean combustion gases.

Seawater-floated wood is a special problem. In all but low-temperature gasification and pyrolysis processes a fine salt fume is formed and emitted with the gases.

Some units have experienced problems burning very dirty fuel because of ash-removal problems and slagging. Do not expect a combustion system to handle every waste fed to it.

(3) Materials Handling

Problems encountered in operation of most systems usually involve materials handling. The design of feed handling and preparation systems is of paramount importance to the success of a wood-energy recovery unit. Most of the manufacturers of new combustion equipment experience more problems with the movement of fuel to the combustion unit than with the combustion process itself. Any claim that feed preparation is not essential is irresponsible. Reputable manufacturers delineate the requirements of the system.

(4) Actual Energy Requirements of the Plant

The total energy requirements of the plant should be studied if a system is being selected. This may involve consideration of changes in form of energy and integration of supply in one unit. It may be practical to consider installing a packaged steam boiler or a hot-oil system for drying, plant heat and log vats, when the initial intent was to use wood waste for drying only.

(5) Requirements for Operating Personnel

In B.C., steam boilers and hot water boilers of more than a given size are required to have constant attention by accredited personnel. No criticism of such measures is implied, since they are designed to ensure safety of operation.

In most parts of the United States, legislation is much less stringent and small packaged boilers can be operated by the normal plant work forces. This approach has encouraged industry to install units to supplant fossil-fuel-fired systems, with expectation of early payout due to modest operating costs. In particular, it has promoted the use of packaged wood-fired boilers used alone or in conjunction with other wood-burning equipment.

There is growing recognition of the potential for a base energy-producing system in mills based on a hot-liquid system (such as oil) operated at modest pressure (about 50 psi). Such systems can provide flexibility of operation and provide energy for virtually every plant function other than electrical generation. It is desirable that such systems can be operated by existing plant personnel.

D. Sizing of Wood-Waste-Fired Systems

In most mills there is more than adequate waste to provide thermal energy requirements. Since fuel quality varies, it is desirable to size any unit amply to meet conditions of worst fuel and peak demand. In addition, it appears that drying schedules in kilns can be accelerated in some cases when ample energy is available at all times, so that excess capacity permits experimentation without fear of increased energy costs. There is an obvious limitation to such sizing because equipment cost increases with size.

E. Applications Matrix

The abilities and limitations of each of the systems have been summarized in a matrix.

(1) Stage of Development

All of the systems have been classified as:

(a) Proven technology;

(b) Prototype stage;

(c) Pilot stage;

(d) Experimental stage.

Most processes are easily classified, but some such as the Dorr-Oliver fluid bed combustor are proven technology in some fields, but have yet to be tested with wood residues as fuels. If a system has yet to be tested on wood residues, that fact is noted under fuel moisture and fuel size. To be classed as proven technology not only must the combustion process be proven, but so must the recovery of energy. Thus some systems, such as Enertherm and Olivine, are classed as prototype. Proven systems must have been operated in an industrial setting by mill operators. Units that are still being operated by the manufacturer are not classed as proven.

(2) Emissions

The unit's ability to meet the provincial requirement of 0.100 gr/sdcf at 12% CO_2 is noted. The European units are designed to meet less stringent European requirements. Some upgrading of the collection system or method of operation will be required to meet local standards.

(3) Automation

The systems ability to operate unattended is noted. The requirements of the B.C. Boiler Code may require an operator, even though the system is automated.

(4) Fuel Moisture

The maximum moisture content that systems can handle has been noted.

(5) Fuel Size

The maximum fuel size that the system can handle is presented. In some cases, there will be a minimum fuel size also. This will usually exclude sanderdust that is often blown out of the combustion zone only partially burned.

(6) Size of Units

The size ranges in which individual units are available are noted. Larger systems can be assembled in most cases by using more than one basic unit.

(7) Costs

An attempt has been made to present the information on capital costs in a form by which two systems can be compared readily. It should be noted that the costs of installation of all of these systems are site specific. In many cases, the manufacturer would not release cost information because of this.

If the costs are listed less erection, then the cost figure appears with an asterisk. For more detailed information on costs, the reader should refer to the section for each system. The costs are calculated on the basis of Btu output.

(8) Turndown Ratio

The turndown ratio is noted if it is known by the manufacturer.

(9) Form of Energy

The form of energy produced by the system has been listed for each generic type. It should be noted that combustible gases, liquids and solids can be used to produce hot gases which in turn can produce steam.

(10) Auxiliary Fuel

The requirements of auxiliary fuel for continued operation is noted. Some systems may require auxiliary fuel for start up.

SUSPENSION BURNERS

	Energex	Waycot	Coen	Peabody Gordon-Piatt	Guaranty Performance
[1]Stage of Development	a	a	a	a	a
Emissions less than 0.100 gr/sdcf?	?	Yes	Yes	Yes	Yes
Is system fully automated?	Yes	Yes	Yes	Yes	Yes
Maximum moisture content, % mc (wet)	15	40	12	12	15
Maximum fuel size	1/8"	1/2"	3/64"	3/4"	1/8"
Sizes Available x 10^6 Btu/hour					
0-10	X		X	X	X
10-20	X		X	X	X
20-30	X	X	X	X	X
> 30	X	X	X	X	X
[2]Costs, $\$10^3/10^6$ Btu					
In size 0-10					
10-20	12		14	9*	7*
20-30		20			
> 30		9			
Turndown ratio	5	4	3	5	5
Form of energy	-------- hot gases --------				
Is auxiliary fuel necessary?	No	No	Yes	Yes	No

[1]a - Proven
b - Prototype
c - Pilot
d - Experimental

[2]*Indicates capital costs only, not including installation

FLUID-BED COMBUSTORS

	Energy Prod. of Idaho	Incinergy	Combustion Power	Johnson Boiler	Copeland	Dorr-Oliver
[1]Stage of Development	a	b	b	c	a	a
Emissions less than 0.100 gr/sdcf?	Yes	No	?	?	?	?
Is system fully automated?	Yes	No	Yes	No	Yes	Yes
Maximum moisture content, % mc (wet)	65	65	52	?	65	([3])
Maximum fuel size	3 in.	3 in.	3 ft.	?	?	([3])
Sizes Available x 10^6 Btu/hour						
0-10				X		
10-20	X	X				
20-30	X		X			
> 30	X		X		X	
[2]Costs, $\$10^3/10^6$ Btu						
In size 0-10						
10-20	10*					
20-30			25			
> 30	10	12.5				
Turndown ratio	3	5	3	3		
Form of energy	---------- hot gases ----------					
Is auxiliary fuel necessary?	No	Yes	No	No	No	-

[1]a - Proven
b - Prototype
c - Pilot
d - Experimental

[2]*Indicates capital costs only, not including installation

[3]No reliable operating data for wood fuels

MULTIPLE-CHAMBER COMBUSTORS

	Basic Environmental	Consumat	Lamb Wet Cell	Envirometrix	Anga & Värme	Berg & Starck	Konus-Kessel
[1]Stage of Development	a	a[3]	a	a	a	a	a
Emissions less than 0.100 gr/sdcf?	Yes	?	Yes	Yes	No	No	?
Is system fully automated?	Yes	Yes	Yes	Yes	Yes	Yes	Yes
Maximum moisture content, % mc (wet)	43	>65	65	50	65	65	60
Maximum fuel size	4 in.	3 in.	3 in.	3/4in.	4 in.	4 in.	4 in.
Sizes Available x 10^6 Btu/hour							
0-10	X	X		X	X	X	X
10-20	X	X		X	X	X	X
20-30	X	X	X	X	X	X	X
> 30	X	X	X	X	X	X	
[2]Costs, $\$10^3/10^6$ Btu							
In size 0-10							
10-20		17.6*					
20-30					14		
> 30	11		10*				
Turndown ratio	4		5				
Form of energy	steam	steam	hot gases	hot gases	steam	steam	hot oil
Is auxiliary fuel necessary?	No	Yes	No	No	No	No	No

[1]a - Proven
b - Prototype
c - Pilot
d - Experimental

[2]*Indicates capital costs only, not including installation

[3]Proven on municipal waste

SINGLE-CHAMBER COMBUSTORS

	Enertherm	Olivine	Lochhead Haggerty	Irvington Moore
[1]Stage of Development	b	b	b	a
Emissions less than 0.100 gr/sdcf?	?	?	Yes	Yes
Is system fully automated?	No	No	No	Yes
Maximum moisture content, % mc (wet)	65	65	60	55
Maximum fuel size	1 ft	1 ft	1 ft	3 in
Sizes Available x 10^6 Btu/hour				
0-10			X	X
10-20	X	X	X	X
20-30	X	X	X	X
> 30	X	X	X	X
Costs, $\$10^3/10^6$ Btu				
In size 0-10			33	30
10-20				
20-30				23
> 30	0.8	0.4	12	
Turndown ratio	4	4		
Form of energy	------ hot gases --------			
Is auxiliary fuel necessary?	No	No	No	No

[1]a - Proven
b - Prototype
c - Pilot
d - Experimental

PACKAGED POWER BOILERS

	Wellons	Ray Burner	Weiss Boiler	Babcock & Wilcox
[1]Stage of Development	a	a	a	a
Emissions less than 0.100 gr/sdcf?	No	No	?	?
Is system fully automated?	Yes	Yes	Yes	Yes
Maximum moisture content, % mc (wet)	50	15	60	60
Maximum fuel size	3 in	¼ in	1 ft	3 in
Sizes Available x 10^6 Btu/hour				
0-10	X	X	X	
10-20	X	X	X	
20-30	X			X
> 30	X			X
[2]Costs, $\$10^3/10^6$ Btu				
In size 0-10				
10-20	18.7	9.2*		
20-30				
> 30				
Turndown ratio	5	2		
Form of energy	--------- steam --------			
Is auxiliary fuel necessary?	No	No	No	No

[1]a - Proven
b - Prototype
c - Pilot
d - Experimental

[2]*Indicates capital costs only, not including installation

GASIFICATION

	Westwood Polygas	B.C. Research	Mellenger Gasodyne	Forest Fuels	Andco Torrax	Union Carbide	Bio-Solar (Woodex)	Canadian Industries Ltd.	University of California	Eugene Water Board
[1]Stage of Development	b	c	b	b	b	b	c	b	b	d
Emissions less than 0.100 gr/sdcf?	Yes	Yes	?	?	?	?	?	?	?	?
Is system fully automated?	Yes	No	?	No	Yes	Yes	No	Yes	No	No
Maximum moisture content, % mc (wet)	50	55	?	20	([2])	([2])	15	([2])		
Maximum fuel size	8 in	3 in	3 in	1 in	(2)	(2)	½	(2)		3 in
Sizes Available x 10^6 Btu/hour										
0-10	X	X	X	X			X	X	X	
10-20	X									
20-30										
> 30					X	X				
Costs, $\$10^3/10^6$ Btu										
In size 0-10										
10-20										
20-30										
> 30		34			140		30			
Turndown ratio	4	2				5				
Form of energy	---------- combustible gases ----------									
Is auxiliary fuel necessary?	No	No	No	No	No	No	No	No	No	No

[1]a - Proven
b - Prototype
c - Pilot
d - Experimental

[2]No reliable operating data for wood fuels

PYROLYSIS

	Tech Air Corporation	Alberta Industrial	Occidental Research	U.S. Bureau of Mines
[1]Stage of Development	b	b	b	c
Emissions less than 0.100 gr/sdcf?	Yes	?	Yes	?
Is system fully automated?	Yes	No	Yes	No
Maximum moisture content, % mc (wet)	5	50	([2])	
Maximum fuel size	3 in	3 in	([2])	
Sizes Available $\times 10^6$ Btu/hour				
0-10				
10-20				
20-30	X			
> 30		X	X	
Costs, $\$10^3/10^6$ Btu				
In size 0-10				
10-20				
20-30				
> 30		7.5	150	
Turndown ratio		2		
Form of energy	combustible liquids and solids			
Is auxiliary fuel necessary?	No	No	No	No

[1]a - Proven
b - Prototype
c - Pilot
d - Experimental

[2]No reliable operating data for wood fuels

3. APPLICATIONS IN THE FOREST INDUSTRY WHERE FOSSIL FUELS MAY BE REPLACED

A. Lumber Dry Kilns

(1) General

Lumber dry kilns represent by far the greatest potential for individual installations where fossil fuels can be replaced by wood waste. There are some 375 kilns in the province drying about 5.5×10^9 fbm of lumber annually. These data indicate the size of market for technology by which wood energy can supplant fossil-fuel energy. Thus, the interest expressed by industry representatives is well based, and a discussion of lumber drying technology is justified.

The need for drying softwoods has been recognized in both the United States and Canada. In the United States, a voluntary standard has been produced by the U.S. Department of Commerce, which has been followed by a similar Canadian standard. In general, the standards require softwoods for house construction to be dried to a maximum moisture content of 19% (dry basis).

(2) How Lumber Dries in Kilns

It is not a function of this study to discuss kiln drying of lumber in detail. However, because the use of wood-derived energy may change conditions within a kiln, it is desirable to describe how lumber dries and what are the effects of operating parameters on drying behaviour.

Water may be assumed to be contained within wood in two forms:

- free water in the cavities of the cells and between the wood cells;
- bound water contained within the cell walls.

When all free water has been removed from a piece of wood, the wood has reached the fibre saturation point (FSP). The FSP is assumed to be approximately 25% moisture content (dry basis).

In lumber drying, little shrinkage takes place when drying from green to FSP. Nearly all shrinkage in a piece of lumber takes place from FSP down to the final moisture content desired. Moreover, the shrinkage of wood is unequal in the radial and tangential directions in relation to the wood grain, so that it is essential to remove moisture at such a rate that warping and degrading of lumber do not occur.

Three basic factors offset the drying of lumber:

- kiln temperature (dry bulb value);
- humidity of the kiln atmosphere;
- circulation of air in the kiln.

In general, increasing kiln temperature increases evaporation rate and, thereby, decreases drying time. Temperature obviously cannot be increased indefinitely because lumber will be degraded by warping and discolouration.

An increase in the relative humidity of the kiln atmosphere slows down evaporation. It may be necessary to maintain a fairly high relative humidity to control the drying rate to a level which produces acceptable lumber. Relative humidity is measured by the difference between wet-bulb and dry-bulb temperatures in kilns. Commonly, kiln control is based on a fixed schedule for dry-bulb temperature and some relation between dry and wet-bulb temperatures.

Increase of air velocity within a kiln promotes evaporation and reduces drying time, provided that there is adequate heat input to evaporate the moisture.

Drying schedules are specific to the species being dried and the source of heat available. In recent years, particularly in the interior of the province, drying schedules have been accelerated to the point that kiln charges can be processed in as little as 24 hours. This trend is continuing with the object of obtaining maximum capacity from a kiln even though thermal

efficiency may decrease. It appears that much of the development work on kiln schedules is being done in the field by kiln operators.

In kilns heated indirectly with steam or water coils, traditionally humidity has been maintained at the desired level by injecting steam. Where low relative humidity is allowable, no steam is injected and venting of kiln gases is practiced. These measures accelerate drying, but at the expense of thermal efficiency (at least in a well-insulated kiln).

In direct-fired kilns (natural gas, LPG, butane and oil), the atmosphere normally is less humid than in a steam-heated kiln because the combustion gases injected into the kiln require that a like amount of gas be vented. Thus, the relative humidity remains low, even with recycle of kiln gases to the burner, and drying tends to be rapid. Indeed, a problem may arise from insufficient moisture in the kiln to obtain proper drying conditions and injection of steam or hot water may be required.

(3) Types of Kilns in Use

Table 1 summarizes the types of lumber dry kilns in use. The selection of a kiln for a specific application depends on the lumber species being dried, on first cost and operating costs, on fuel available and on general acceptability for mill conditions.

The construction of kilns will not be discussed herein except to comment that well-insulated, impermeable design is desirable to minimize heat loss and to promote uniform temperature and humidity within a kiln.

(a) Low-Pressure Steam Kilns (normally 15 psig)

These kilns cannot be used where high temperatures are desired for rapid drying, but are ideal where relatively low temperature (up to about 185 F) and high humidity are

TABLE 1. TYPES OF LUMBER DRY KILNS

Medium	Pressure	Heating Medium Temp F	Add Humidity	Heat Exch	Vent Control	Direct Fired	Const. Bleed To Atmosph. & Vents	Most Suitable For
1) Low-pressure steam	15 psi	250	Steam	Yes	Yes	No	No	Kiln to 185°F Hi-Humidity
2) Med.-pressure steam	150 psi	366	Steam	Yes	Yes	No	No	Kiln to 240°F Good Humidity Control
3) Hi-pressure steam	over 150 psi	over 366	Steam & Water	Yes	Yes	No	No	Hi-temp kilns
4) Low-pressure hot water	50 psi	250	Hot Water	Yes	Yes	No	No	Kiln to 185°F
5) Electricity		1500	Optional Water or Steam	Yes	Yes	No	No	Hi-Temp. or Booster to Lower Temp-Kiln
6) Gas butane heated w/heat exchanger		1000	Optional Water or Steam	Yes	Yes	No	No	Med-Hi-Temp. Very rare
7) Gas butane heated direct fired		400	Optional Water or Steam	No	Yes	Yes	Yes	Med. to Hi-Temp. Low Humidity W.B. Say - 160°F
8) Wood-waste direct fired		400	Optional Water or Steam	No	Yes	Yes	Yes	Med. to Hi-Temp. Low Humidity
9) Wood-waste fired W/heat exchanger		1000	Optional Water or Steam	Yes	Yes	No	No	Med. to Hi-Temp. Very rare
10) Wood-waste fired heat exchanger W/heating oil		400 - 500	Optional Water or Steam	Yes	Yes	No	No	Hi-Temp. - Very rare

required. These units have not found general favour throughout the province because a steam boiler installation is required and a qualified stationary engineer must by law attend the boiler.

(b) Medium to High-Pressure Steam Kilns (150 psig)

These kilns provide maximum flexibility in temperature and humidity control. Temperatures up to 240°F can be achieved and relative humidities in the 80 to 90% range can be obtained easily. The units are ideally suited to automatic control and require a minimum of attention. They do require a steam plant with its attendant costs and qualified operators.

(c) Low-Pressure Hot Water Kilns

These typically use water at 50 psig and 250°F to avoid the need for steam engineers to operate the boiler unit. The maximum dry-bulb temperature achieved in kilns is about 185°F. Humidity can be controlled to any desired level by regulation of venting and by steam or water injection.

Hot water avoids condensate return and steam trap problems so common in steam-heated kilns. However, hot water heated kilns are not capable of high heat inputs, being inferior to both steam-heated and direct-fired kilns in this respect. Some operators prefer hot-water heated kilns because of their low maintenance and ease of operation.

Hot-water kilns have almost infinite turndown ratio in common with steam-heated kilns.

(d) Electrically Heated Kilns

Electricity is probably the ideal source of energy for lumber kilns, since it can be controlled easily and has infinite flexibility in operation. No large commercial kilns of this type have been installed in B.C., presumably because the price of electric power is unfavourable. A number of such units were

installed in Quebec in 1972 to 1974 when Quebec Hydro offered attractive industrial electric rates. These rates are no longer available. Electrically heated kilns require a supplementary source of water vapour.

(e) Natural Gas or LPG Direct-Fired Kilns

These kilns are common in the interior of the province, although some have also been established in coastal areas. They are inexpensive to install and operate, have a wide turndown ratio, and have the capability of rapidly increasing kiln temperature at the beginning of a run. There is no practical limitation on dry-bulb temperature which can be obtained, but the wet-bulb temperature rarely rises above 165°F because of the limitations on humidity described earlier. Because of this limitation on wet-bulb temperature, such units are useful primarily for softwoods.

(f) Natural Gas or LPG Indirect-Heated Kilns

This type of kiln is rare in North America, but it has been used in Europe. In theory it should provide excellent control of drying conditions, with capability for rapid temperature rise. However, initial cost and high operating costs militate against its use. Like electric kilns, humidity control is a problem with this type of kiln.

(g) Wood Waste Direct-Fired Kilns

These are similar in performance to gas-fired kilns and have the same limitations on achievable kiln humidity. They do not require a boiler plant, as do steam kilns, but require fuel preparation and handling where gas-fired kilns need none.

(h) Wood Waste Indirect-Fired Kilns

The equipment may involve an air-to-air or an air-to-oil heat exchanger. Such units are rare in North America. At least one local manufacturer is considering this configuration because of the potential hazards of sparks entering the kilns from wood-residue combustion.

(4) Heat Required to Dry Lumber

Lumber drying consists primarily of evaporating water from wood. The amount of heat required depends on a number of factors:

- heat to bring the kiln building and machinery up to temperature;
- heat loss from the building;
- heat lost through venting of hot gases from the building;
- heat to bring lumber up to temperature;
- heat to evaporate water in the wood;
- wood species being dried;
- moisture content of wood before and after drying.

An indirect-heated kiln (steam heat, for example) should require less heat input for a given drying schedule than a direct-heated kiln because, in the latter, there is a very substantial heat loss in air bleed from the kiln to the outside.

There is surprisingly little information on heat use in dry kilns. This probably occurs because steam and gas use frequently are not metered separately and so there is little opportunity to relate energy use to kiln throughput.

The available data on heat consumption in lumber kilns vary widely, which is not surprising in view of the number of species handled, the size of lumber, the moisture content of lumber and methods of heating kilns. Data on heat consumption are normally presented in two ways:

- Btu per 1,000 fbm of lumber handled;
- Btu per lb. of water evaporated.

The first is the simpler to use because it glosses over the effects of species, moisture content, etc. Total heat for a kiln charge is simply the value per 1,000 fbm multiplied by the amount of lumber in the kiln. The second is more precise because it

measures what is to be evaporated; viz. the water in the lumber. Unfortunately it does not lend itself to a simple generalization based on normal lumber measurements.

Bramhall and McIntyre (1)[1] show heat requirements ranging from 1836 to 3164 Btu per lb. of water evaporated from softwoods, generally starting at 50% and ending at 13% m.c. (total weight basis). Their data are shown in Tables 2 and 3.

Bachrich (2) has indicated a heat requirement of 1,250,000 Btu per 1,000 fbm when drying to 19% m.c. (dry basis). Wengert (3) has indicated a thermal efficiency in kilns of about 50%.

In view of variations in moisture content, species, and mill location it probably is reasonable to assume the following heating requirements:

1.5 million Btu per 1,000 fbm;
2,000 Btu per lb. of water evaporated.

These will change from B.C. Interior to Coast and from kiln to kiln, but do provide some measure of the total heat demand in dry kilning.

(5) Effect of Kiln Schedule on Heat Demand

The preceding section dealt with total heat requirement to dry a charge. In kiln operation, heat demand is not constant, so that there must be a capability in the heat supply for controlled input. The ratio of the maximum output of a burner, or other heat supply, to the minimum output it can deliver is called the turn-down ratio. Steam-heated kilns have virtually infinite turndown, while most gas-fired burners probably do not function adequately below 10% of rated capacity. Many gas burners instead of having a wide modulating range simply shut off below a given operating level.

---

[1]Numbers in parentheses refer to bibliography.

TABLE 2. MOISTURE EVAPORATED AND HEAT USED FOR KILN DRYING LUMBER

Charge	Mill	Construction	Species	Drying time hr.	Max. temp °F	Avg** DBT °F	Avg** WBT °F	Vent air Btu/lb.	†Wi x 1000 lb.	††Wf x 1000 lb.	M fbm	Btu x 10^6	Btu/lb.
1	1	Conc. blk.	Sitka spruce	65	185	175	150	150	430	366	153	202.8	3164
2	1	Conc. blk.	Western hemlock	31.5	230	225	195	30	548	402	150	312.5	2128
3	2	Al panel	Spruce pine	33	240	210	180	65	541	405	201	249.5	1836
4	2	Al panel	Spruce pine	24	240	225	190	40	509	383	~200	232.8	1842
5	3*	Al panel	Spruce pine	23	177	170	145	180	912	791	~400	282.9	2332

† Wi = initial weight

††Wf = final weight

* Two kilns operated in tandem

**Estimated

Source: G. Bramhall and S. McIntyre - private communication

TABLE 3. HEAT BALANCE FOR CHARGE 3
OF TABLE 2

Component	Btu/lb.	Wt.	Btu x 10^6
H_1, sensible heat wood	(240-50) 0.325 = 61.75	352,200	21.75
H_2, sensible heat water	(240-50) 1.0 = 190	188,800	35.88
H_3, heat of wetting	53	136,000	7.21
H_4, heat of evaporation	960	136,000	130.56
H_5, venting air	65	136,000	8.84
Total "essential" heat			204.24
Total heat used			249.50
Heat losses* (by difference)			45.26

*Heat losses may be expressed as 336 Btu per lb. water evaporated or as 1.36 million Btu per hour of operation, the latter being the more practical measure.

Source: G. Bramhall and S. McIntyre - private communication

The turndown ratios of alternate sources of heat should be considered in evaluating their applicability to kiln drying. A wood-waste-fired unit that could not vary significantly from maximum output might well be unacceptable.

There is little information available on heat demand throughout kiln operation. Data from one gas meter serving three independent gas-fired kilns show the gas consumption varied from 1.275 to 3.012 million Btu per hour. On an average day the turndown ratio was 2.4.

Similar data for an interior mill which has a recording meter on one gas-fired kiln show that a turndown of 2.5 is required, based on three-hour consumption figures. The average heat requirement for the total drying period of 69 hours was 4.3 million Btu per hour. It appears that a turndown ratio on a single kiln burner should be twice the minimums measured or at least 5/1 to provide effective use of fuel and control of kiln conditions.

(6) Implications of Replacing Fossil Fuels with Wood-Waste Energy on Kiln Operation

(a) Kiln Schedules and Operation

Two principal concerns arise when fossil fuels are replaced with wood-waste energy:

- Will the relative humidity of the air in the kiln be adequately high to allow operation without steam or hot water injection?
- Will heat losses from the kiln through displaced air be unacceptably high because wood requires more air for the combustion process than do the fossil fuels?

The first has been the principal concern expressed by kiln operators. Natural gas and propane can be burned with about 10% excess air. The moisture from the products of combustion will represent about 17.5% of the gases. Carbon

dioxide and nitrogen make up the remainder. These fuels are used successfully in kilns without extra moisture injection. Dry wood, even in a finely divided form, normally is burned with a much higher excess air volume (100% for an Energex unit) so that gases from wood combustion are diluted by excess air and the moisture content of the gases is low, typically 7% (v/v) for wood with 15% moisture and 100% excess air. If low humidity in a dry kiln is of concern, direct firing with dry wood could lead to problems. The higher amount of venting required because of the large amount of combustion air could further aggravate the situation.

The first Waycot system installed on a lumber kiln had to be modified to incorporate moisture injection because the operating conditions reportedly were not acceptable for the lumber handled. However, experience with Energex systems subsequently has demonstrated that there appear to be no operating problems and that moisture injection is not necessary in most cases. This does not mean that situations may not arise in which moisture injection is required.

Early data on the Lamb-Cargate Wet Cell at Plateau Sawmills indicate that no humidity control problems have occurred. This experience has been reported for the Fluid Flame unit also. These last two types of units operate primarily on wet fuel, and the moisture from the wood fuel almost certainly does increase the moisture content of the combustion gases. .The moisture content would be 16% (v/v) for 50% moisture and 100% excess air. The Lamb-Cargate reportedly operates at lower excess air, so the moisture content will be higher, perhaps as high as 25% (v/v). The humidity of the kiln air is also affected by the moisture being evaporated from the wood. A 100,000 fbm kiln charge with an initial moisture content of 50% wet basis and a final

moisture content of 15% wet basis will release about 150,000 lb. of water into the kiln atmosphere. A natural-gas burner would only inject 15,000 lb. of water into the system while drying this lumber. It appears that humidity control should only be a problem at the very beginning of the kiln schedule, before the moisture from the wood begins to evaporate.

It is probable that the utilization of thermal energy in wood will be less than in fossil fuels, primarily because the volume of gas from wood burning is greater than that from fossil-fuel burning (on an equivalent energy basis). This greater volume dictates more venting, which represents heat loss. Where wood-waste fuel is abundant, this is no problem and inefficient operation may be acceptable or even desirable as a means of waste disposal. This is particularly true for those systems which can handle wet waste. For systems requiring dry fuel, which may be in limited supply, it may not be practical to contemplate extremely inefficient operation. However, as is shown later in the report, in any mill drying and planing lumber there are more than sufficient dry shavings to provide fuel for the dry kilns.

Early reports from Plateau Sawmills indicate that the kiln schedules have been significantly shortened since the Lamb-Cargate unit was installed. This probably results primarily from the fact that the Lamb-Cargate unit has 25 million Btu/hr. capacity and the gas burners it supplanted had only 20 million. Thus the unit is run at full capacity, with no concern for fuel cost, and the high venting rate ensures that relative humidity in the kiln remains low. The net result has been to increase kiln throughput. There is a limit to how far such operation can be pushed, but it probably will be established only through field testing. The same effect could probably be achieved with fossil fuels.

It appears that in most installations fossil fuels can be replaced by wood with no loss in kiln operability and throughput, and that significant increases in throughput may be achieved where the burner is oversized to utilize fuel which is abundant and has no cost. In some cases it is probable that moisture injection will be required to maintain a relative humidity in the kiln suitable for the species being dried.

(b) Quality of Hot Gas Delivered to a Kiln

With indirectly heated kilns there is no concern about cleanliness of air within the kiln. Kilns fired directly with natural gas or LPG (propane or butane) also are free from concern about particulate or acidic gas contamination. A number of years ago, light grades of oil were used to fire directly into kilns. While the combustion gases were free of solid particles, the considerable sulfur content of the oil led to formation of sulfur oxides which caused severe corrosion of metal ducting where gases reached the dewpoint.

Kiln operators have traditionally been opposed to any heating source which injects solid particles into the kiln because of possible degradation of lumber quality and potential for kiln fires. More recently, as fossil fuels have become expensive and difficult to obtain, there has been a relaxation of attitudes toward contaminants in kiln gases. The position now is that solid particulates will be accepted as long as lumber is not degraded thereby during planing. The continued safe operation of the dozens of systems in use has alleviated many of the fears of a fire hazard.

Wood-fired burners inject ash from wood directly into kilns, and this ash will settle on lumber. The amount of true ash can be calculated as assuming 1.5 million Btu

heating duty per 1,000 fbm of lumber, 8,000 Btu per lb. of wood and 0.50% ash in wood. The ash produced can be shown to be 0.938 lb. per 1,000 fbm. With 100,000 fbm in a typical kiln, the amount of ash which may settle in the kiln is 93.8 lb. Some systems collect some of the ash prior to the gases entering the kiln but others, particularly suspension burners, allow all the ash to enter the kiln.

Such ash on lumber can be shaken or blown off during subsequent handling. However, some of it enters the shavings stream and ends up as a recycling load in the kiln, and the remainder may cause a dust nuisance in plant work areas.

(7) Potential Use of Alternate Fuels in B.C. Lumber Kilns

Data on the number and size of kilns in the province are scarce. The Western Forest Products Laboratory indicates that there are 100 companies drying lumber in 375 kilns, but has no breakdown of kiln size and type. Madison's Canadian Lumber Directory states that the following amounts of lumber were moved in the province in 1976:

- by road and rail 7,913 million fbm;
- by water 2,735 million fbm.

If it is assumed that this represents the total cut of lumber (it is in line with COFI's projections) and that 90% of interior lumber and 13% of coastal lumber is dried, the following dried lumber splits result, based on a 35/65 split of total production between coast and interior:

- coast 3,727 x 0.13 = 484 million fbm;
- interior 6,921 x 0.90 = 6,229 million fbm;
- total = 6,713 million fbm.

At 1.5 million Btu per 1,000 fbm of lumber, the yearly heat demand is:

$$6{,}713 \times 10^6 \times \frac{1.5 \times 10^6}{1000} = 10.07 \times 10^{12} \text{ Btu}$$

Assuming 300 days operation and 24 hours per day, the average hourly heat demand is:

$$\frac{10.07 \times 10^{12}}{300 \times 24} = 1.40 \times 10^9 \text{ Btu}$$

Split among 375 kilns, this represents some 3.7 million Btu per hour average load on each kiln. This seems low, in view of some of the large burners now in use, and may reflect inaccurate estimates of number of kilns and amount of lumber dried or possibly too high a utilization of kiln space.

The above yearly use of heat is equivalent to 10.07 billion cu.ft. of natural gas or 57 million gallons of fuel oil.

Since much of the coastal drying is done by steam produced in hog-fuel boilers, it is probable that the fossil fuels which can be replaced are represented chiefly by the interior lumber production. Thus, the volumes of fuels involved might be 9.34 billion cu.ft. of gas or 53 million gallons of oil.

B. Veneer Dryers

(1) General

Veneer dryers perform essentially the same function as lumber kilns except that they operate as continuous-flow devices rather than batch units. Thus, wet veneer flows continuously into one end of the dryer, dry veneer emerges from the other end and the heat supply is constant.

Since B.C. produces the bulk of Canadian plywood, and since most of the veneer produced in the province is dried[1], there obviously is a major amount of thermal energy consumed in veneer dryers.

(2) Construction and Operation of Veneer Dryers

Veneer sheets normally proceed continuously in a horizontal position through the dryer supported by a metal conveyor. Conveyors are stacked vertically so that a number of drying lines proceed through the kiln in parallel. In large units, there may be up to 11 drying levels. Veneer dryers are further characterized according to:

(a) Air-Flow Pattern

- Cross flow - hot gases pass transverse to the movement of veneer through the dryer. The dryer usually is divided into a number of zones, each with its own air-circulation system and vent stack. Typically there may be six to 10 zones in a dryer.
- Longitudinal flow - in these, air is circulated longitudinally and the dryer commonly has only one or two zones.

(b) Method of Heating

- Steam heated - steam coils are used to heat the drying air as it is circulated in the kiln. Such indirect heating can also be achieved by using hot water or hot oil as the heat exchange fluid.

---

[1]Some undried veneer is exported, but other undried veneer is imported. It is assumed these quantities balance approximately. Most veneer plants in the province sell their veneer to plywood manufacturers where it is dried before plywood is made from it.

- Direct fired - gas and LPG are used commonly for firing directly into the kiln. Solid fuels, burned completely, can be used for the same purpose.

More recently, so-called jet dryers have been used for veneer. In these the hot drying gases are directed onto the sheets through rows of jets arranged transverse to the sheets. Typically, such a dryer may have four banks for veneer and 16 rows of jets, each row of which, in effect, forms a zone of its own.

Normally, direct-fired kilns are serviced by one burner, which discharges hot gas blended with recycle gas into a plenum which serves all zones.

Veneer dryers operate at a much higher temperature than do lumber kilns because there is little likelihood of degradation of thin veneer sheets by rapid drying. Typically, the wet end temperature is about 300°F and the dry end is about 370°F. These values vary considerably from mill to mill.

(3) Energy Consumption in Veneer Dryers

As with lumber dry kilns, there is a dearth of information on the actual breakdown of energy use for industrial veneer dryers. This is surprising, in view of the fact that 60 to 70 percent of the energy used in lumber and plywood manufacturing is consumed in the drying step.

Corder (4) performed a study on a Coe Manufacturing Co. steam-heated, five-line, two-zone, longitudinal-flow dryer. The veneer was 3/16-inch-thick Douglas-fir sapwood. His test results indicate that the heat consumption averages about 2,200 Btu per lb. of water evaporated, almost the same as for lumber dry kilns. The unit tested had a steam supply equivalent to some six million Btu per hour, a relatively small dryer.

One of Weldwood of Canada Ltd.'s new jet dryers has the following performance:

(a) Dryer size - 3 sheets of 4 x 8 ft. veneer wide;
- 11 sheets long;
- four lines.

(b) Residence time - 8 1/2 minutes.

Assuming that the veneer is 1/8-inch thick, weights 25 lb. per cu.ft. dry, and is dried from 70% to 15% (dry weight basis), the amount of water removed per cycle is:

$$4224 \times \frac{0.125}{12} \times 25 \times (0.70 - 0.15) = 605 \text{ lb.}$$

The probable heat input into this dryer, then, must be:

$$605 \times 2200 \times \frac{60}{8\text{-}1/2} = 9.4 \text{ million Btu per hr.}$$

Alternatively the capacity of the dryer could be expressed as 300,000 Btu/1000 sq.ft. of 1/8-inch equivalent.

(4) Quality of Flue Gas Required in Veneer Dryers

Traditionally, steam has been used for indirect heating of dryer gases and natural gas or LPG has been used for direct firing. None of these cause significant pollution problems within the dryer. There has been concern that dryers fired with wood or other solid fuels might have problems in deposition of ash on veneer and general contamination of the plant area with ash. The latter might be more serious than the same situation in sawmills because veneer dryers are normally inside the plant building while dry kilns are usually outside.

The amount of ash generated, for example, by wood burning has been shown to be about 1.0 lb. per 1.5 million Btu of heat input. If a dryer has a 20 million Btu per hour input, the ash production is about 13 lb. per hr. This is a very small amount, and, since much of it will escape through the dryer vents, the amount

actually associated with the veneer should be small.

Lane Plywood of Eugene, Oregon (5), has an Energex burner firing sander dust into the green end of a 16-section, six-deck veneer dryer. Their work has shown:

- no gluing problems are encountered unless an accumulation of ash occurs (rare);
- ash interference with gluing is more serious when plywood trim is burned than when sander dust is used;
- the veneer has a film of ash when it comes from the dryer, and this film causes some nuisance when the veneer is handled;
- the pitch build-up in the dryer is less serious when wood is burned than when the kiln is fired directly with gas or indirectly with steam.

(5) Potential Use of Alternate Fuels in B.C. Veneer Dryers

Plywood production in B.C. is stated to be 2,250 million square feet of 3/8-inch equivalent per year. Since all veneer used in plywood manufacture is dried, the entire production represents a potential use for wood fuel. Coastal mills almost universally use indirect-steam-heated dryers (some gas-fired units are in use), with steam generated in hog-fuel boilers. Thus, the coastal production already uses wood waste as fuel, and should be subtracted from the total production to obtain the true potential market for energy from wood.

Statistics are complicated by the fact that the interior of B.C. exports low-grade undried veneer, while the coast imports high-grade undried veneer. It probably is most satisfactory to ignore veneer production in estimating energy use and use plywood production as the basis.

It appears that the capacity for veneer dried for plywood in the province is split as follows:

Interior - 2.904×10^9 sq. ft. 1/8-inch;

Coast - 5.079×10^9 sq. ft. 1/8-inch.

The total plywood capacity corresponding to the above is 2.661×10^9 sq.ft. of 3/8-inch, which checks reasonably closely with the 2.25×10^9 sq.ft. of actual plywood production reported for 1976.

The potential total heat requirement should be based on the capacity of the mills rather than on actual production in any year. Thus, if it is assumed coastal mills use indirect heating primarily, only some 2.9 billion sq.ft. of 1/8-inch veneer is available for drying. Operating data from a variety of dryers show that the heat requirement for drying is about 600,000 Btu per 1,000 sq.ft. of 1/8-inch veneer. The potential heating duty in the province in one year then is:

$$600{,}000 \times 2.9 \times 10^6 = 1.74 \times 10^{12} \text{ Btu}$$

This amount is about one-fifth of that used in lumber kilns and represents about two billion cu.ft. of natural gas or 12 million gallons of oil.

The above data may well be conservative because some coastal mills use direct-fired gas dryers, but the values are adequately correct to permit forecasts for potential fossil fuel replacement.

C. Log Conditioning Vats

(1) General

Log vats or conditioning vats have been used primarily to thaw frozen logs in the colder areas of the province to permit

them to be peeled for veneer. The improvement in performance during the peeling operation has led to their use throughout the year in the interior of the province, and some coastal plywood mills are now in process of installing such vats. It is probable that the use of log vats will continue to increase for some time and that the ultimate market may be 25% greater than that shown in the following section.

(2) Operation of Log Conditioning Vats

Log vats may condition logs by sprays of hot water, by direct steam injection, and by immersion in hot water. The hot water used in vats can be heated by:

- injection of steam directly into the water;
- use of a heat exchanger which can be heated with steam, hot combustion gases, or any suitable hot process fluid;
- submerged combustion in which natural gas or LPG is burned beneath the water surface.

A long-log vat typically requires from 1.5 to 2.0 million Btu per hour heat input (gross heating value of fuel). The load will vary with time of year, being high in winter when ice and snow are brought into the vat with the logs.

Water in log vats is lost by carryout on logs and by evaporation. The residual water becomes increasingly strong in material dissolved from the wood, until ultimately it has to be discarded. It may be bled out gradually or replaced as a batch. Such water is highly polluted and must be treated appropriately before it is released.

(3) Amount of Energy Used in Log Vats

There are 176 vats of an equivalent two-million Btu/hr. capacity. If it is assumed that the mean energy demand in a log vat is 1.75 million Btu per hour, the present yearly demand in

the province is:

$$1.75 \times 10^6 \times 8000 \times 176 = 2.46 \times 10^{12} \text{ Btu}$$

This value assumes vats operate 8000 hours per year. This amount is nearly the same as the estimated potential fossil-fuel replacement in veneer dryers.

The size of installation required for a typical plywood or veneer plant ranges from 14 to 28 million Btu per hour. Such a heat load probably would best be handled by two or more burners to permit flexibility of operation.

(4) Requirements of Heat Energy Supplied to Vat

Most vats are indirectly heated, either by steam or hot combustion gases. The heat exchange surfaces foul on the liquid side with sediment and solids precipitated from solution. The heat supply side of the exchanger may also foul, so that it is desirable to have reasonably clean gas passing through the exchanger. It is probable that solid particulate resulting from combustion of wood would not offer a serious fouling problem if the velocity in the exchanger is maintained above the minimum transport level.

A number of conditioning vats are now heated by submerged combustion using natural gas or LPG. In these units the combustion process takes place beneath the water surface and direct heat transfer between hot gases and water results. The process is desirable because there are no heat transfer surfaces to become fouled.

There appears to be no reason why wood waste could not be fired directly from a burner into vat water. The small amount of solid particulate generated would be insignificant compared with the dirt and wood particles from the logs.

D. Lime Kilns

(1) Energy Load in Lime Kilns

The indicated annual production of kraft pulp in B.C. for the period 1980-85 is between 4 million and 5 million ADT. Of this amount, approximately 40% or 1.6 to 2.0 million ADT per year is expected to be produced by mills using natural gas as the primary fuel for lime kiln operation and 60% or 2.4 to 3.0 million ADT per year in mills using fuel oil.

The average fuel requirement for lime kiln operation may be taken as approximately 2.63 x 10^6 Btu (2630 cu.ft.) as natural gas and 2.50 x 10^6 Btu (0.388 bbl) as fuel oil per ADT of unbleached pulp. The indicated total annual fuel consumption for the 1980-85 period is, therefore, in the order of 4.20 to 5.25 x 10^{12} Btu (4.2 to 5.2 billion cu.ft.) as natural gas, plus 6.00 to 7.50 x 10^{12} Btu (932,000 to 1,164,000 bbls) as fuel oil. Fuel consumption per ton of calcined lime product ranges from 8 to 14 million Btu, depending on kiln size. The industry expects to achieve 9 to 10 million Btu in efficient kilns.

It is possible that these figures could be reduced by 10% to 20% by modifications to the present burning systems.

(2) Temperatures Required for Calcination

Calcining of the calcium-carbonate kiln charge starts after the moisture has been evaporated and the temperature raised to between 1500 to 2000°F. This zone is usually 35 to 50 feet from the discharge or burner end of the kiln. The actual length and temperature of the calcining zone depends on a number of factors, including kiln slope, moisture and impurities in mud feed and on burner flame shape.

The ultimate calcining temperature in a kiln depends on residence time, being about 2300°F for short kilns and 2000°F for long kilns. The longer kiln is preferred because product quality is better at the lower temperature, product is discharged at a lower temperature, and kiln heat losses are lower.

The question of whether or not wood alone could be used for firing lime kilns depends primarily on the temperature, configuration, and luminosity of the flame combustion. The luminosity of the wood flame is lower than both oil and gas flames. Thus the radiant heat transfer can be much less.

A theoretical maximum flame temperature for any fuel can be calculated. This maximum flame temperature does not allow for any loss due to radiative heat transfer. The temperature of the actual flame is, therefore, dependent on the size of the flame and the emissivity of the flame. Maximum and measured flame for some fuels are given below.

	Maximum °F	Measured °F
Natural gas	4380	2500
Propane	3840	-
Producer gas (135 Btu/cu.ft.)	3050	-
Oil	4260	2900
Wood	3000	1700

The measured flame temperatures were for flames approximately 3 ft. x 4 ft. The emissivity of the flames also varies from 0.8 for an oil flame to 0.4 for a gas flame to 0.3 for a wood flame. The measured temperature for a wood flame may be higher in some suspension burners that use very low excess air levels and dry wood.

The use of wood gas of, say, 150 Btu quality for calcination is also feasible, though here again the flame temperature is

significantly less than that obtained with oil and natural gas. Probably the net result of using wood or wood gas alone in a lime kiln would be to reduce kiln capacity, although many factors other than flame temperature bear on this.

The modern kiln burner is designed to provide flame shaping by separate control of fuel flow to inner and outer nozzle rings. This control allows for precise adjustment of total fuel/total air ratio and operation at low average levels of excess air. It also allows the operator to control the growth of heavy ring deposits without changing primary air flow.

It is, therefore, important that the introduction of supplementary heat or fuel does not detract from the degree of operator control necessary for efficient kiln operation. It is also important that the ash from the supplementary fuel does not adversely affect the reactivity of the calcined product or the characteristics of the inert component.

(3) Feasibility of Using Wood for Firing a Lime Kiln

(a) General Comments

The complete replacement of fossil fuels with wood without reducing kiln capacity may be feasible only where the wood is burned directly in the lime kiln and the resulting high-temperature flame leads to good radiant heat transfer. Such a situation could occur where, for example, a Coen burner was used fired with very fine dry wood.

There appear to be problems with flame-shape control when burning wood alone, so that it may be realistic to contemplate a 50% replacement of fossil fuels, using them to stablize the flame.

If wood gas is available, there should be no need for auxiliary fuel, provided that a steady supply of gas is provided.

The various possibilities for individual and co-burning are discussed in succeeding sections.

(b) Cleanliness of Gases

Silicon dioxide is mentioned in the literature as being detrimental to the quality of green liquor and this is given as the reason that pulverized coal is unsuitable as a direct-fired fuel. Volume 1 of "Pulp & Paper Manufacture", page 555, makes the statement that "Pulverized coal is not fired directly into the kiln, as is customary in the cement and lime-from-stone kilns, because of the detrimental effect that the silica in the ash would have on the liquor". There is no explanation of why the silicon dioxide particles are not discharged from the system with the grit from the slaker or what level of silica can be tolerated.

It is possible that 60% to 80% of the ash content of the chips to the digester is present in the smelt from the recovery furnace. Approximately half of this ash will be calcium carbonate and oxide and 15% to 30% will be silicon dioxide. If the chips are clean, the total ash will be in the order of 0.3 to 0.5% of dry fibre or 20 lb. per ADT. Of this there will be 3 to 6 lb. per ADT of silica as silicon dioxide (sand) which is inert and dense, so that some will be removed from the system with the clarifier dregs and some with the grits from the slaker. The remainder may stay with the mud, pass through the kiln and form part of the approximately 10% "inerts" in the kiln product. A comparison of the relative effects on inerts from coal and from wood firing will be of interest at this point.

If a kiln were fired with pulverized coal having a gross heating value of 14,000 Btu per lb., the firing rate would be in the order of 180 lb. dry coal per ADT. If the coal has an average ash content of 10%, the inert fraction of the lime kiln product will increase by 18 lb. per ADT from 46 to 64 lb. per ADT. If the

ash analysis for the coal burned shows 44% silicon dioxide, the silica component of the inerts will be increased by approximately 8 lb. per ADT to approximately 11 lb. per ADT or 17% of the total inerts. The remaining coal ash would probably contain 4 lb. Al_2O_3, 4 lb. Fe_2O_3 and 2 lb. oxides of calcium, magnesium, sodium and potassium.

If, on the other hand, the lime kiln were direct fired with wood having a gross heating value of 8,000 Btu per lb., the firing rate would be approximately 315 lb. per ADT, dry basis. If the fuel is in the form of dry shavings with an ash content of 0.55%, the inerts will be increased by 1.5 lb. per ADT (from 46 to 47.5 lb. per ADT) of which approximately 0.55 lb. per ADT will be silicon dioxide and 0.95 lb. per ADT will be calcium oxide. The potential contribution of silica from wood firing to the silica normally present is, therefore, probably less than one-sixth of the contribution from the inherent ash in the wood chips to the digester. Thus, it appears to be feasible to provide all heat to a lime kiln from wood burning, as far as gas cleanliness is concerned (ignore for the moment the matter of heat transfer).

If only 50% of the kiln heat is supplied from wood, the potential adverse effects on pulping and recovery would appear to be negligible.

(4) Considerations in Firing Lime Kilns with Wood or Wood Gas

There are a number of methods of applying wood fuels to supplement oil or gas in firing of lime kilns. In some cases, the capital cost of new equipment plus increase in operating cost will not justify the application at present and anticipated future oil and gas prices. This is especially true if the application requires additional operating staff. The preferred installation will, therefore, be one which requires minimum operating and maintenance labour and low capital expenditure.

If wood fuel is available in the form of dry shavings or sander dust, the preferred firing method would involve storage, fuel feeding, pulverizing, screening and direct injection with the primary air into the existing oil or natural gas flame (the boiler at the MacMillan Bloedel Ltd. Particle Board Plant is fired in this way using a Coen burner).

The proportion of wood to gas or oil fuel which can be tolerated will depend on the degree of flame-shape control available to the operator with the combined fuel. If the wood moisture content is below 15% and the wood particle uniformly fine, it should be possible to achieve moisture removal in the first 10 feet of travel and ignition and complete burnout of all particles in the next 25 to 30 ft. of the calcining zone. This burnout program would appear to conform to the requirement for a long "soft" flame to achieve maximum heat transfer by radiation.

The main advantage of this particular firing system is, of course, that there is no need for additional duct work or equipment near the kiln-firing platform. The fuel preparation equipment can be located at some distance and would include fuel storage and metering bin, hammer mill, classifying screen, overs return system and secondary metering of fuel to primary air fan inlet.

Where sander dust is available, the pulverizer may be omitted or included for standby purposes only.

The storage and metering equipment for pulverized shavings or for particleboard sander dust can use standard equipment, but for plywood sander dust special attention should be given to design of both storage and metering to ensure consistent and reliable proportioning of wood/oil or wood/gas fuel.

With this system, the shape and length of the kiln burner flame will be largely controlled, as with all oil or all natural gas firing, using the inner nozzle rings to lengthen the flame and the outer nozzle to bring it back, but the range of control may

not be as great because of the reduction in total controlled flow. That portion of flame shape which can be attributed to wood fuel input will be affected by wood moisture and particle size, which are not under kiln operator control, and by excess air which is controllable within limits.

Total air flow for combined firing based on fuel oil at 10% excess air 83% efficiency, natural gas at 12% excess air 79% efficiency, and wood at 23% excess air 75% efficiency will increase by approximately 10% over all-oil or all-gas firing.

Total products of combustion per million Btu of heat requirements will be approximately 21% higher for wood than for oil or gas, so that the draft loss and dust loss will be greater for combined firing than for all-oil or all-natural-gas firing and the induced draft fan must be selected or adjusted accordingly. This may have an adverse effect on the kiln emission-control equipment.

Wood flame temperature at 15% moisture, 23% excess air, will be approximately 3000°F which, while below that of oil or natural gas at 10-12% excess air, appears to be sufficiently high for good control of the calcining process.

As a first alternative to this system, it may be possible to provide a cyclone-type refractory-lined furnace (such as Energex Cyclo burner or Waycot Turbulator) external to the lime kiln windbox and to complete the drying and ignition of wood particles before they enter the calcining zone. The gas temperatures from these burners are in the range of 2000-2300°F depending on the fuel and excess air. These temperatures are probably too low for use in the lime kiln, at least until some experience is gained with wood-fired kilns.

A further alternative could be based on wood gasification, using one of the available gasification systems, to produce

approximately 8000 cfm of 135 Btu cu.ft. gas when fired with wet fuel, or approximately 6000 cfm of 165 Btu cu.ft. gas when fired with dry fuel. The wet gas duct diameter would be approximately 14 inches. The installation would consist of fuel storage and reclaim, hog, hogged fuel storage and metering, gasifier, tar removal and return system, bed and ash removal systems, and gasifier operating and safety instrumentation. Space requirements based on dual-body gasifiers would be in the order of 30 ft. x 40 ft. The gasifier may be located away from the lime-kiln operating area by extension of the wet gas duct. If the gasifier is designed for a cold gas efficiency of 70%, the fuel requirements may be 40% greater than for direct-conversion alternatives.

The economic viability of any of these schemes to reduce purchases of natural gas or oil depends on factors which vary with mill location, so that each application requires a separate detailed study before a decision can be made. There are certain overall considerations which may be useful as a guide in decision making.

The discussion so far has been based on a single lime kiln with an average input in the order of 90 x 10^6 Btu per hour as natural gas or 85 x 10^6 Btu per hour as oil, suitable for a kraft mill or approximately 800 ADT per day brown-stock rating. The annual consumption of fuel for the kiln would be approximately 113,000 bbl. per year as oil or 756 x 10^6 cu.ft. per year as natural gas. Projected annual costs for lime-kiln fuel for the 1980-85 period could be in the order of $1.7 million per year for oil (@ $15.00 per bbl.) and $2.3 million per year for natural gas (@ $3.00 per 1,000 cu.ft.). The potential savings through supplying one-half of the kiln requirements, therefore, may be in the order of $800,000 per year for oil and $1,100,000 per year for natural gas.

Total projected annual costs for the wood preparation and burning system selected, including fixed charges on capital and

based on 1980-85 conditions, must be kept below these figures if the substitution project is to be attractive.

There is so much speculation about the performance of wood or wood-gas fired burners in lime kilns that it is obvious full-scale experimentation is required. This would ideally take the form of a program in which a mixed-fuel burner (a Coen for example) was fired with a fossil fuel and dry pulverized wood. The program would start with only a small percentage of wood fuel and would gradually increase wood use. The effect of such substitutes would be monitored by product quality and by general kiln operability. Such a program would provide conclusive data on the degree of substitution allowed for one wood source (wood with higher ash might well perform differently) without kiln de-rating or product degradation.

E. Space Heating

All mills in the forest industry require some degree of space heating for worker comfort. In the interior of the province, a heavy heating load exists in the winter, while summer loads may be negligible. On the coast, it is not normal to provide space heating in mills except where workers are restricted in motion and are exposed to cold air.

It is difficult to obtain any universal value for heating duty in mills because mills are constructed and operated differently. Older mills are not insulated and so heating requirements may be high, while newer mills with full insulation may require relatively little heat. There does appear to be a trend everywhere to provide more heat for worker comfort.

Pulp mills and plywood mills generally require less energy per unit area than do sawmills because they generate heat in their processes.

As a generalization, the heating load in cold climates in insulated buildings varies from 100 to 200 Btu per hr. per sq.ft. In the same

climate with older poorly insulated buildings, the heating load may be twice the above values. While heating load is seasonal, it does appear that under the most severe conditions for most plants it may approximate the heat load of a veneer dryer or a lumber dry kiln.

Methods of heating vary with the fuel available. Steam is an ideal heating medium, where a power boiler is available, because it has high latent heat, is easily distributed, and poses no fire hazard. In general, all mill complexes having a steam-generating unit utilize steam for heating. Where natural gas is the primary fuel, gas-fired unit heaters are used, although the open flame in such heaters can be considered a hazard in dusty areas. There are reports of direct firing of natural gas into mill areas where there is adequate room venting.

A few examples will give some idea of heat demand during colder months:

B.C. Forest Products Ltd., Mackenzie

1. Pulp mill - 550 TPD nominal capacity;
   - Fully insulated;
   - Heat supply 24 million Btu per hr.
2. Main sawmill - Fully insulated, single building;
   - 32,000 sq.ft.;
   - Heat supply 6 million Btu per hr.
3. Stud mill - Fully insulated;
   - 20,000 sq.ft.;
   - Heat supply 2.2 million Btu per hr.
4. Green chains - Not heated.

Weldwood, Canim Lake

The heating load during cold weather for sawmill and plywood mill is stated to be 10 million Btu per hr.

Heat derived from wood-waste burning should be exchanged with room air or some other heating fluid, if it is to be used for

space heating. The odours and particulate emission resulting from burning of solid wood are not acceptable in worker space. The potential for using hot water or hot oil for heating buildings does not appear to have been exploited, although some small systems have been used in mills.

There are available small automated wood-fired hot-air furnaces for heating industrial buildings. These may have merit in mills where steam is not available and natural gas, LPG and oil are expensive or in short supply.

The possibility of recovering heat from teepee burners or other waste incinerators has been discussed. Air-to-air or air-to-liquid heat exchangers would be required, if such heat recovery were instituted. A drawback to such a source of heat is that the waste burner in mills may operate for only one or two shifts and the mill would be unheated for the remaining time. Also, heat derived from a waste burner is not readily controlled automatically nor can quick response be expected in the morning when the burner is starting up.

F. Motor Generator Units

(1) Diesel Engine - Electric Generator Units

Diesel engines can be operated on a range of gaseous fuels, as well as on liquid fuel. The Crossley gasifier with scrubber has been used to produce a low-Btu clean fuel gas for use in diesel engines coupled to electric generators. More recently, other gasifiers have been proposed for use in areas which electric utilities do not serve and where the cost of such power is secondary to having power available. Traditionally, such applications were found in remote areas where agricultural wastes were available and where low-cost labour permitted economic operation.

There is a requirement for diesel-electric units fueled with wood-derived gas or oil in those areas where electricity is not available from utilities. With present fossil fuel prices and availability, such units are not economically attractive. Experience has shown that electrical energy developed by modern diesel-electric units costs four to five times as much as energy from utilities (hydro and central power stations). The smaller the unit, the less attractive are the economics.

It has been suggested that gas derived from wood gasification could be used directly in a diesel engine. In view of the ash and liquid products carried by such gas, it seems unlikely that an engine could operate effectively for any length of time on such a fuel. This position is supported by the fact that automobile engines run on wood and coal gas in Europe during the Second World War required complete rebuilding after one year of operation. Thus, while engines can burn dirty gas, engine maintenance may be so high that operation is uneconomic.

(2) Gas Turbine - Electric Generating Units

There has been considerable interest over the years in operating a gas turbine either on hot combustion gases or on fuel gas derived from wood pyrolysis. Combustion Power Co. Inc. of Menlo Park, California has done a considerable amount of work on this concept and found that ash and other particulate in the gas caused fouling of turbine blades. The company feels that the concept is sound, but it is necessary to have a gas-cleaning device which removes solids effectively, operates at high temperature, and has a relatively low pressure drop. The need for solving this problem led to development of the CPC dry granular-bed scrubber.

There has been little further activity in wood-fired turbo-generator units.

G. General Drying Duty

(1) Direct-Fired Drying

Wood-fired burners have been used for drying hog fuel, particle-board furnish, and the like wherever ash and possibly small amounts of carbon do not adversely affect the material being dried. Typically, such drying is done in rotary units fitted with appropriate emission-control devices to catch not only ash from the combustion process, but also fine wood particles entrained in the drying gases.

The market for such energy is limited to those places where hog fuel, wood flakes, etc. must be dried. In B.C. this market appears to be small, at least at present.

The experiment in hog-fuel drying at the Canadian White Pine Mill of MacMillan Bloedel has been discontinued. The Energex burner used for the dryer functioned well, but it was not possible to obtain enough dry fuel for the burner to dry all of the wet hog to a uniform moisture content (30 to 40%), and the problems of balancing wet and partially dried fuel in the furnaces were greater than the benefits from having all of the fuel fairly dry. It is interesting to speculate that a wet-fuel burner, such as the Lamb-Cargate wet cell, should have been able to provide enough heat to dry all of the wet fuel provided the dryer capacity was large enough.

The Waycot unit at Domtar's plant at Huntsville, Ontario, is successfully drying furnish for the particle-board plant. Reportedly, it operates well and any particulate emission causes no problems in the material dried. A standard direct-fired rotary dryer is used.

(2) Indirect-Fired Drying

If contamination of product during drying is of concern, heat from burners can be exchanged with clean air. No such units are known in B.C. nor in Canada.

The MacMillan Bloedel Particle Board Plant uses fine dry wood particles with natural gas in a Coen dual-fire burner to produce steam to dry particle-board furnish. This is indirect use of heat for drying, but the example probably falls better under the next section on packaged boilers.

H. Power Boilers

(1) Potential Applications

Replacement of fossil fuels in power boilers may take three forms:

- replacement of fossil-fuel-fired supplementary burners in existing hog-fuel power boilers;
- replacement of fossil fuels with wood gas in boilers which cannot accept a solid fuel that produces ash;
- replacement or alteration of fossil-fuel-burning boilers to accommodate a wood-fired burner (primarily package-boiler types).

The problems of using suspension burning of wood in supplementary burners may be similar to those in the lime-kiln application, where oil and gas burners provide excellent control of combustion and temperature. This may overstate the case because pulverized wood burners fed with a very fine, dry fuel (minus 1/32-inch and bone dry) operate with excellent stability and with a turndown ratio of five to one.

In conventional hog-fuel boilers there is need for precise control of supplementary burners. Pulverized wood burners could

be used, provided there was always a supply of dry prepared wood available and feed and control devices were provided. The metering of such fuel is critical and a pilot flame of natural gas (or propane) is required to permit rapid safe start-up.

Probably the greatest potential for replacing fossil fuels exists in package boilers, which for this study are defined as those having a capacity less than about 30,000 lb. per hr. of steam. There is no reason why larger units could not be considered, but it was necessary to limit the scope of the study. There are available proven package boilers burning only pulverized wood, with or without a standing pilot flame. Bohemia Inc. at Eugene, Oregon, operate a Ray unit at 10,500 lb. per hr. without pilot (except at start-up) and with little attention. This unit is designed to accept fuel coarser than fully pulverized material, and has a small grate area to accept the fallout of burning particles. Other units require no grate area if the fuel is properly prepared.

It appears that any package boiler designed for oil or gas can be adapted to use a suspension burner for pulverized wood. Units, such as the Coen and Ray, produce a long luminous flame which promotes radiant-heat transfer, while the Energex and Waycot units produce little radiant gas. The firing of a wood fuel into a boiler designed for fossil fuel will result in some de-rating of capacity because of extra gas volume and potential decrease in radiant energy. This de-rating may be as high as 50% in extreme cases.

There has been considerable resistance to complete firing of boilers with pulverized wood fuel. However, where fossil fuel prices have driven operators to make the change, good experience is reported and some are drying wood waste to obtain an optimum fuel. It should be recognized that substitution of wood for oil or gas is a site specific decision dependent on many factors. Some situations favour immediate conversion, while others are

unfavourable. Those plants which have wet, dirty wood waste should compare costs carefully before opting for wood firing.

(2) Potential Replacement of Fossil Fuels in Power Boilers

It is difficult to establish the potential amount of fossil fuels in the industry which could be replaced by wood energy. Many of the larger mills are installing new wood-fired power boilers which are virtually independent of supplementary fuel.

I. Heating Process Fluids

The principal process fluid used in forest industry plants is steam. Since steam is produced in boilers fired with fossil fuels or hog fuel, it is outside the terms of reference of this study. It is true that steam may be produced in wood-fired packaged boilers and so may not fall into the category of steam from hog-fuel-fired power boilers, but the use of waste wood is covered in the previous section.

Water and heat-exchange oils are used for providing heat to various types of process equipment. They substitute for steam where a steam boiler does not exist and where the costs of maintaining a steam plant are unfavourable. Hot water and hot oil can be operated without engineers as required under the B.C. Boiler Code.

Hot water is acceptable where temperatures can be relatively low (240 - 280°F). Oil is much more suitable for high temperatures and formulations are available for operation typically up to 700°F. The specific heat of oil is markedly less than that of water, so that higher temperature or a larger flow rate is needed to carry the same total amount of heat as water.

The Waycot unit at Domtar heats oil for the particle-board presses in a conventional shell-and-tube heat exchanger. A portion of the total hot gas flow is bypassed as required through the exchanger. Oil temperature at the exit of the exchanger controls the damper regulating

the amount of bypass. Reportedly the system has worked well with no fouling of heat exchanger surfaces.

Unit wood-waste burners could be used for heating oil for a variety of uses around forest industry plants:

- particle-board press platens;
- plywood-press platens;
- process vessels and tanks;
- space heating.

J. The Industry in B.C.

Previous sections have identified the energy requirements of specific areas in the forest-products industry. It is outside the scope of this study to examine the specific needs of individual mills or groups of mills, but it is worthwhile considering for typical examples whether or not the available waste will provide the requisite thermal energy.

Case I - Sawmill Cutting 100,000 fbm Daily

(1) Waste Production

(a) Typical Waste Distribution:

- Sawdust - 20 cu.ft. SWE per 1000 fbm;
- Shavings - 15 cu.ft. SWE per 1000 fbm;
- Bark
  - Interior mill - 20 cu.ft. SWE per 1000 fbm;
  - Coastal mill - 25 cu.ft. SWE per 1000 fbm;
- Solid wood as chips or chunks - 45 cu.ft. SWE per 1000 fbm;

(b) Dry Waste Produced (shavings)

- Assume 90% of production is kiln dried;
- Amount of shavings

$$= \frac{15}{1000} \times 25 \times 0.90 \times 100{,}000;$$

$$= 33{,}750 \text{ lb per day;}$$

- Equivalent gross heating value

$$= 33{,}750 \times 8000^{*}$$
$$= 270 \times 10^{6} \text{ Btu per day.}$$

(2) Heat Required in Dry Kilns

Gross heat input

in drying from 44 to 15% m.c. (wet basis) $= 1.5 \times 10^{6}$ Btu per 1000 fbm;

Heat required in kilns (direct firing)

$$= 100{,}000 \times 0.90 \times \frac{1.5 \times 10^{6}}{1000} = 135 \times 10^{6} \text{ Btu per day.}$$

It appears, therefore, that any mill which dries lumber will have more than adequate dry shavings to supply heat to the dry kilns.

(3) Total Energy Requirements of Sawmill (including electrical energy)

Dr. J. Zerbe (6) of the U.S. Forest Product Laboratory at Madison, Wisconsin, and others have stated the total energy requirements for various sectors of the forest industry are:

Sawmills	2.3×10^{6} Btu per ton of product;
Plywood mills	8.8×10^{6} Btu per ton of product;
Pulp mills	40×10^{6} Btu per ton of product;
Paper mills	10×10^{6} Btu per ton of product.

A 100,000 fbm mill produces about 210,000 lb. of lumber per day, or 105 tons. Total daily waste (wet and dry but excluding chips) is about 5500 cu.ft. SWE or 137,500 lb. of dry wood content.

---

*This is a conservative value for planer shavings.

This wood has a gross heating value of 1.1×10^9 Btu. The total energy requirement for the mill is 241×10^6 Btu per day, so that even allowing for efficiency of converting wood waste to energy, any sawmill should be self sufficient.

Case 2 - Plywood Mill Producing 150 million sq.ft. of 3/8-inch Equivalent per Year

(1) Waste Production

Typically, debarked logs have the following product yields in plywood mills:

- Dry veneer	59% by volume
- Core	13%
- Round up	19%
- Trim	5%
- Shrinkage	4%

Assuming trim represents dry veneer, the amount of dry waste is about 8% based on usable veneer. Assume for convenience that trim and sander dust represent 10% of the veneer production.

The mill in one year produces the following amount of dry waste:

$$150 \times 10^6 \times \frac{0.375}{12} \times 25 \times 0.10 = 11.72 \times 10^6 \text{ lb.}$$

The gross heating value of this waste is:

$$11.72 \times 10^6 \times 8000 = 93.75 \times 10^9 \text{ Btu per year.}$$

(2) Heat Required in Veneer Dryers

The heat required for drying 1000 sq.ft. of 3/8-inch plywood from 40 to 8% m.c. (wet basis) should be about 0.9×10^6 Btu, since the efficiencies of dry kilns and veneer dryers are about the same. The mill will then require:

$$150 \times 10^6 \times \frac{0.9 \times 10^6}{1000} = 135 \times 10^9 \text{ Btu per year.}$$

Thus, if the waste production and heat requirement assumptions are correct, the amount of dry waste generated in a plywood mill probably will not be quite adequate to operate the veneer dryer. There is considerable variation in data given for waste production in plywood mills and it is possible that information used herein is conservative.

(3) Total Energy Requirements

From Zerbe (6) it is seen that a plywood mill consumes some 8.8×10^6 Btu per ton of product. The assumed mill produces some 117 million lb. or 59,000 tons of 3/8-inch plywood in one year. The energy required is:

$$59{,}000 \times 8.8 \times 10^6 = 519 \times 10^9 \text{ Btu per year.}$$

The total waste from a plywood mill including an estimate of 10% by volume for bark is about 41% of the plywood production if it is assumed all the core and about half the round up are converted to chips. The total waste produced, in dry content, then, is:

$$0.41 \times 117 \times 10^6 = 48 \times 10^6 \text{ lb. per year.}$$

This waste has a gross heating value of:

$$48 \times 10^6 \times 8000 = 381 \times 10^9 \text{ Btu per year.}$$

It is seen that the waste from the plant probably is not adequate to provide the total energy requirements and may not even be able to provide total thermal energy.

4. CLASSES OF SYSTEMS AVAILABLE FOR RECOVERY OF ENERGY FROM WOOD WASTE

A. Suspension Burners

These are burners in which relatively fine wood particles are mixed with air and burned in suspension. They include units in which the combustion takes place in a special chamber (Energex), as well as units in which the combustion occurs in a larger space such as the firebox of a boiler (Coen, etc.)

Suspension burners are proven technology. There are more than 200 systems in operation by the manufacturers evaluated here. Some have been in service for 15 years.

Suspension burners produce a hot, relatively clean gas that can be used in dry kilns, power boilers, veneer dryers and other processes. The burners are fully automated and have sufficient turndown for most process applications.

Suspension burners are relatively inexpensive and have pay-back periods of one to three years when they are used as replacements for fossil-fuel burners. The one disadvantage of the system is that it requires dry, fine fuel. Dry fuel is available at most industry locations in the form of planer shavings, but it must be processed by a hammermill to reduce the particles to an acceptable size.

B. Fluid-Bed Combustors

In fluid-bed combustors a fluidized bed of some granular solid, usually sand, is used to provide a heat reservoir and a turbulent mixing zone for combustion to take place. Fluidization describes the phenomenon which occurs when a gas, such as air, is passed upwards through a bed of granular material. Initially air simply percolates through the bed, but as the air volume and velocity increase, a point is reached at which the granular material is lifted and the entire mass takes on a boiling appearance. This boiling or fluidization persists over a fairly wide range of air flow, and, ultimately, as velocity increases the granular material is entrained in the air.

These units complete combustion inside the equipment and there is normally no opportunity for radiant heat transfer from hot gases. Wood waste can be fed directly into the bed or dropped onto it from above. Combustion takes place partially in the fluid-bed zone and partially in suspension above the bed. There may be provision for ash removal from the bottom of the bed, but much of the ash undoubtedly is emitted with combustion gases.

In a sense, a fluid-bed combustor is a form of suspension burner in that wood is burned in a suspended form. No fixed bed of fuel exists.

Fluid-bed combustors as a class represent proven technology. Many units are in operation and have been proved through experience.

C. Multiple-Chamber Combustors

Such units normally have a first chamber in which fuel is burned with insufficient air, leading to quiet partial combustion and formation of combustible gases. These gases pass to a second chamber in which complete combustion is achieved. The purpose of two chambers is to separate the gasifying and main combustion functions, thereby, in theory, minimizing ash carryover and allowing good control of combustion.

In the first chamber, supplementary fuel may be used if required to ensure that the waste is properly gasified or burned. The Consumat unit uses about 1.5 million Btu per ton of waste to achieve this function.

D. Single-Chamber Combustors

In these units, combustion takes place in one chamber only in which underfire and overfire air are controlled. The classification includes silo-type burners, teepee burners and special small units such as the Lochhead Haggerty furnace.

Because combustion takes place in only one area, the units may be more difficult to control than multiple-chamber units. They probably emit more particulate than multi-chamber units and have a relatively low turndown ratio.

On the other hand the low first cost and simplicity of operation makes them useful for disposal of waste with some energy recovery.

E. Packaged Boilers

For the purposes of this study, a packaged boiler will be a shop-assembled unit shipped on skids completely ready to connect and operate. Units larger than 30,000 lb. per hr. of steam will not be considered.

Packaged boilers have long been fabricated for use with fossil fuels. More recently units have been developed for firing on various types of wood waste. The essence of all of these smaller units is automation of operation, with preparation of feed. The best known units operate on dry, pulverized wood waste and offer flexibility and simplicity of operation.

F. Gasification

The thermal decomposition of wood, in the absence of sufficient oxygen for full combustion, leads to the formation of a combustible gas, liquid products and charcoal. Such processes are commonly referred to as pyrolysis, carbonization and gasification. For the purposes of this report, those processes of thermal decomposition which emphasize combustible-gas production are referred to as gasification processes. All others are referred to as pyrolysis processes, emphasizing production of liquids and solids. It is to be understood that there is no basic difference between gasification and pyrolysis processes, and that the terminology is adopted purely for convenience of discussion.

The presence of air is not necessary for thermal decomposition of wood. Wood will decompose under vacuum or in an inert atmosphere. Hot combustion gases or air are used to raise wood to the decomposition temperature, and most existing processes produce a gas which is diluted with nitrogen, water and carbon dioxide.

The principal products of wood decomposition are:

Gaseous
- carbon dioxide;
- carbon monoxide;
- hydrogen;
- water;
- paraffinic hydrocarbons (methane);
- olefinic hydrocarbons (ethylene).

Liquid	-	acetone;
	-	methyl alcohol;
	-	acetic acid;
	-	oils;
	-	tars.
Solid	-	charcoal;
	-	ash.

The amount of each depends on decomposition temperature and reaction time. Low temperatures favour liquid production and high temperatures favour gaseous products. Operating temperatures range practically from 700 to 1600°F.

Typically, most gasification processes produce a gas in which carbon monoxide and hydrogen are the principal combustible components, with only minor amounts of hydrocarbons. Gas as produced will contain vapourized liquids and water, as well as the normal combustible components. As the gas cools, these liquids condense out leaving a "clean" dry gas.

Wood gas produced by most processes has a heating value of 100 to 150 Btu per cu. ft. (clean). Special processes, such as Union Carbide's Purox system, yield gas at about 300 Btu per cu. ft. by using oxygen rather than air as the feed to the reactor. Dirty hot gas containing oil and tar may have a considerably higher heating value than clean gas, so where feasible dirty hot gas should be burned directly. Note than where all of the wood is converted to gas, the wood ash must be emitted with the gas. Thus in most processes the gas contains ash as a contaminant.

Wood gasification is not a new technology. Wood burning to produce charcoal is an ancient art, and most modern wood gasification units are patterned on technology developed for coal gasification. The principal difference between wood gasification as being attempted and established coal gasification is in scale of operation. Coal has been gasified for many years to yield consumer gas for distribution within cities. Wood gasification appears to be suitable primarily for small-scale applications.

There are many different systems for gasifying wood waste including:

- fluid bed reactors (B.C. Research);
- rotary kilns;

- shaft reactors (Westwood Polygas);
- multiple hearth furnaces.

Each system has special arrangements to handle a variety of fuels and to dispose of ash.

Wood gas is not a panacea for energy shortage problems. It cannot be stored effectively and its low Btu value makes transport expensive. It must be scrubbed clean if it is to be transported or stored. The gas can be burned in standard burners, but the nozzles must be different than for natural gas because of the different air-to-fuel ratio for burning and the different burning characteristics. Thus wood gas cannot be mixed indiscriminately with natural gas.

Wood gas is attractive because it can directly replace any fossil fuel without concern about contamination. It probably can be used anywhere that natural gas is used, including lime kilns and possibly recovery boilers,although the somewhat lower flame temperature produced will affect radiant heat transfer. It can be used directly in diesel-electric generator sets and might serve as a synthesis gas for methanol production.

The problems associated with handling wood gas have been discussed earlier. Probably the main drawback to its widespread use is the rather sophisticated technology involved and the requirement for a large plant size to achieve economy of production cost.

While gasification continues to evoke interest and shows promise for the future, none of the systems evaluated in this report can be classified as proven technology.

G. Pyrolysis

As was described above, pyrolysis has been used to designate those processes which emphasize liquid and solid fuel production from wood waste. Some combustible gas is generated in pyrolysis processes and it can be used to heat the reactor or to dry waste wood.

The pyrolytic oil produced is normally similar to a heavy fuel oil. The advantage of oil-producing pyrolytic systems is that the energy can be stored and transported in a convenient form, unlike gasification.

H. Alcohol Production from Wood Residues

There has been much activity in recent years in the area of using wood residues and other renewable biomass for the production of alcohols. Alcohols are excellent fuels for automobiles and industrial processes and, since they are liquid, they can be stored and transported.

Two basic processes can be used to produce alcohols from wood residues:

(1) Bacterial Fermentation

The aerobic fermentation of wood to ethyl alcohol had become important as early as the first World War. At that time, yields were poor due to a lack of research into the reactions taking place and the presence of numerous fermentation inhibitors. Since that time a great deal of information on the process has been obtained. Alcohol yields of 48 Imperial gallons per ton of dry wood have been obtained.

In addition to ethanol, butanol can also be fermented from wood. The yield of fermentation products varies with the wood species, but it amounts to between 25% and 35% based on the dry wood.

Dr. M. Wayman of the University of Toronto has been conducting studies on fermentation of biomass to ethanol. He is enthusiastic about the potential for microbial fuel production.

At the present time, economics do not favour alcohol production by the fermentation process. Since only relatively large plants can be contemplated, alcohol production does not offer a solution to the individual mill.

It is possible to obtain methane from anaerobic bacterial degradation of wood. Sanitary landfills evolve copious amounts of methane by this process, but domestic waste is much more readily biodegraded than wood waste. Such deterioration of wood does not appear to be a promising means of producing a fuel gas.

(2) Pyrolysis and Catalyzed Chemical Reactions for Producing Methanol

The thermal decompositon of wood residues at high temperatures in the absence of oxygen yields several component streams. These

streams include a gas phase, a distillate and a solid phase. The methanol can be separated from the distillate phase using a combination of liquid-liquid extraction, azeotropic distillation and extractive distillation. The products of the dry distillation of wood, cellulose and lignin are presented in Table 4.

The one process that has attracted the most interest for the production of methanol is the synthesis of methanol from wood-pyrolysis gas. Hydrogen and carbon monoxide are combined at temperatures of 250 to 400°C and at pressures of 100 to 200 atmospheres in the presence of a suitable catalyst. Low-pressure methanol synthesis processes are now available from the following licensors:

- Imperial Chemical Industries;
- Lurgi Corporation;
- J.F. Pritchard and Company;
- Nissui-Topsoe Limited;
- Mitsubishi Gas Chemical Company.

An economic pre-feasibility study of large scale methanol fuel production from Canadian forest biomass has been prepared by Intergroup Consulting Economists Ltd., of Winnipeg, for the Environmental Management Services of Fisheries and Environment Canada.

Although this study focuses on priority methanol fuel use as a gasoline substitute for road transportation, a wide variety of other potential end uses exist for "neat" methanol fuel:

- Fuel for gas-turbine electric-generator sets, or combined power-cycle equipment, particularly for peak power needs; methanol has better burning characteristics for gas turbines compared with alternative fuels and may raise unit ratings by 5 percent.
- Fuel in large public utility or industrial boilers; operation results close to those for natural gas (no derating for gas-fuel converted facilities) with reduced pollution (i.e. no sulphur content).
- Fuel in industrial applications, substituting in almost all fuel applications for LPG, distillate fuel oil and natural gas.

TABLE 4

PERCENTAGE PRODUCTS OF THE DRY DISTILLATION
OF WOOD, CELLULOSE AND LIGNIN

DISTILLATION PRODUCT	WOOD		CELLULOSE		HYDROCHLORIC-ACID LIGNIN			REMARKS
	SPRUCE	ASPEN	SPRUCE	ASPEN	SPRUCE	SPRUCE	ASPEN	
Charcoal	37.81	29.45	34.86	28.08	50.64	45.0	44.3)	Percent by weight on the dry, ash-free substance.
Tar	8.08	9.83	6.28	4.27	13.00	9.6	14.25)	
Methanol	0.96	1.48	0.07	0.00	0.90	0.7	0.87)	
Acetone	0.20	0.79	0.13	0.20	0.19	0.1	0.22)	
Acetic Acid	3.19	7.37	2.79	2.66	1.09	0.6	1.28)	
Carbon dioxide	50.50	-	62.90	-	9.6	-	-)	Percent by gas volume
Carbon monoxide	32.55	-	32.42	-	50.90	-	-)	
Methane	9.23	-	3.12	-	37.50	-	-)	
Ethane	1.72	-	1.56	-	2.00	-	-)	

- Feedstock for high Btu gas needed for peak shaving by gas utilities.
- Fuel for space heating; characteristics are similar to natural gas and require a natural gas-type heat exchanger.
- Fuel for power generation by fuel cells.

The production of alcohols from wood wastes does not appear to offer an early solution to energy requirements in the forest industry. While B.C. has large amounts of wood residue, it is spread over the province. Alcohol production requires a large central facility, with sophisticated technology, so that the individual mill does not appear to be in a position to benefit from alcohol from wood.

The technology should not be ignored, but it is more likely to represent a future site-specific waste-utilization operation than a means for supplanting fossil fuels in the near future.

I. Wood Densification

Wood waste can be dried and pressed into pellets and logs, thereby making transportation more economic than for loose waste, and also rendering the wood more suitable for combustion in certain furnaces. Densification itself is only one step in the process of recovery of energy from wood waste.

5. CRITERIA FOR EVALUATING SYSTEMS

A list of criteria by which each process or type of equipment has been evaluated is given below. Under each heading all of the available information is summarized, so that the potential user will be able to judge whether or not any given process or equipment is suitable for his application.

A. State of Development of Technology

(1) Proven

This implies that the process has been proven by installation and operation of one or more systems and has been demonstrated to perform reliably. The system will have been operated by someone other than the manufacturer. Accurate operating data, process limitations, and capital and operating costs, will have been established. There may be various degrees of "proven". For example, a process which can demonstrate 20 successful installations should obviously be better established than the one with only two installations.

(2) Prototype

The first industrial-size unit has been installed and is in process of being evaluated. The evaluation process will establish operating reliability, process performance, and areas in which the system should be revised. The potential for the process will be indicated and approximate capital and operating costs will be provided.

(3) Pilot Stage

The process or equipment is in a pilot or demonstration stage to establish operating principles developed in an experimental stage. The unit is probably from one-tenth to one-quarter the size of an industrial model. The unit will not provide accurate costing data nor information on reliability of the system.

(4) Experimental Stage

The unit is in a laboratory experimental stage or possible in the first phases of pilot study. A principle is being demonstrated

and economies are not available except by order of magnitude.

In the succeeding section, "Evaluation of Systems", each process, system or equipment assembly is evaluated and classified under one of the generic categories. This first criterion for evaluation is probably the most significant of the group and also the most difficult to present unequivocally. There will inevitably be disagreements as to state of development. The ratings presented herein are based on information available at the time this report was written. Subsequent developments may well change the ratings.

B. Fuel Quality Required

(1) Moisture content acceptable for reliable operation:

(a) Dry - less than, say, 15%;
(b) Wet - 40 to 55%;
(c) Both.

(2) Feed preparation required to size the fuel for the system.

(3) Acceptability of dirt, tramp metal, etc., to the process.

C. Properties of Energy Produced

(1) If energy is in the form of combustion gases derived directly from wood waste:

(a) What is the flame temperature or gas temperature?

(b) What volume of gases is produced per unit weight of wood waste?

(c) Is the flame retained inside a combustion device or is it discharged where radiant heat transfer can take place?

(d) Composition of gases produced.

(e) Amount of air needed for combustion.

(2) If energy is in a form, such as wood gas derived from pyrolysis:

(a) Temperature at which it is produced for use;
(b) Composition of product;
- Btu value;

- Chemical analysis;

(c) By-products such as tar, oil, contaminated water;

- Btu value;
- Other value.

D. Recovery of Potential Energy in Wood Waste

Direct-combustion processes provide for maximum heat recovery, if the gases are adequately cooled (exchanged). However, if these gases are allowed to escape while still hot, a major heat loss results from sensible heat of the air and latent heat of vapourized water. Processes producing combustible fuels, such as oil and gas, may recover only a fraction of the potential heat value of the wood. In areas where suitable wood waste is scarce, it may be necessary to consider using that process which provides for maximum utilization of the potential energy.

In many situations the need for efficient utilization of residues does not exist, since most mills have excess residues which present a disposal problem at present. To these mills the thermal efficiency of the system may not be critical.

E. Environmental Acceptability

Processes for converting wood waste to energy may result in emission of particulate and polluting gases and in production of effluents which pose disposal problems. Those processes which cause such undesirable side effects have extra costs of operation which must be considered in evaluating them.

The B.C. Pollution Control Branch has recently published new emission control objectives for the forest products industry. These are presented in Table 5. Basically, wood-fired power boilers are required to meet an emission level of 0.100 gr/sdcf at 12% CO_2. It is presumed that any process or equipment served by a wood-fueled burner would be required to meet these same emission criteria.

F. Flexibility of Operation

(1) Range of unit sizes or process ratings available to meet market

TABLE 5

OBJECTIVES FOR GASEOUS AND PARTICULATE EMISSIONS

FROM THE FOREST PRODUCTS INDUSTRY

SOURCE	PARAMETER	LEVEL	
		A	B
Recovery furnace (kraft)	Particulate (gr/sdcf)	0.10	0.20
	Sulfur dioxide (ppm)	100	200
	TRS (ppm)	6	25
	Opacity (%)	20	n.a.
Lime kiln	Particulate (gr/sdcf)	0.10	0.20
	Sulfur dioxide (ppm)	30	60
Power Boiler Combination Fuel	Particulate (gr/sdcf)	0.10	0.20
	Opacity (%)	20	n.a.
Wood Waste Burners	Opacity (%)	20	40
Trench burners	Opacity (%)	20	40
Pneumatic conveying	Particulate (gr/sdcf)	0.05	0.10
Veneer dryers	Total condensibles (gr/sdcf)	0.05	0.10

demand.

(2) Turndown ratio of unit. Required to establish whether or not the process can meet demands for energy imposed on it by plant operation.

(3) Start-up time and complexity of procedure to start up.

(4) Hazards, if any, in start-up and shutdown.

G. Suitability for Use in Forest Products Industry

(1) Amount of labour required to operate, particularly as compared with equivalent use of fossil fuels.

(2) Quality of personnel required for operation

- degree of skill compared to basic personnel in plant;
- special qualifications, such as by the Boiler Code.

(3) Amenability to automation.

H. Capital Cost

(1) Cost of basic equipment in various sizes;
(2) Cost of installing equipment;
(3) Cost of ancillary equipment installed;
  (a) Fuel processing and handling;
  (b) Utilities - mechanical, electrical, etc.;
  (c) Pollution control.

As mentioned in the previous section on state of development of technology the accuracy of cost estimates made by the manufacturers will vary with the development stage of the system.

The capital costs of all the equipment under consideration can be compared with the costs for a modified conical incinerator. These devices are capable of disposing of wood residues, but normally offer no opportunity for energy recovery. The difference in costs between the conical incinerators and the other equipment represents the cost of energy recovery. The costs for three sizes of burners are presented in Table 6. These costs do not include taxes or transportation. The transportation costs for the 82.5 ft. model from Vancouver to Prince George would be about $5,000.

The costs of equipment are expressed as thousands of dollars per million Btu output (see Matrix).

I. Operating Costs

(1) Labour to run process or equipment. Compare with equivalent fossil-fuel system.

(2) Maintenance.

(3) Electric power.

(4) Pilot and standby fuels.

J. Life of Process or Equipment:

(1) Probable useful life;

(2) Ease of repair and replacement.

TABLE 6

CAPITAL COSTS FOR MODIFIED CONICAL INCINERATORS

SIZE (ft)	35	60	82.5
Burning capacity			
lb./hr. bone-dry wood	2,210	11,200	28,900
Btu/hr. gross	17.7×10^6	90×10^6	230×10^6
Equipment costs ($)	36,000	76,000	140,000
Installation costs ($)	14,000	22,000	35,000
Installed cost			
$/million Btu (gross)/hr.	2,824	1,089	760
$/bone-dry ton/hr.	45,450	17,500	12,110

6. EVALUATION OF SYSTEMS

A. Suspension Burners

1. Energex
2. Waycot
3. Coen
4. Peabody Gordon-Piatt
5. Guaranty Performance Inc.

1. Energex

The Energex burner is a single-chamber cyclonic suspension burner suitable for burning dry wood residues of less than 1/8 inch. Energex burners have been widely used in the past four years. The first burner was installed on a veneer dryer in 1972. Since 1974, an additional 73 units have been installed on dry kilns, board dryers, veneer dryers, rotary kilns, flash dryers, package boilers and hot hogs. Table 7 lists the Energex installations in Canada.

The Energex system is automated and apparently does not require additional operating personnel. At most installations, the kiln or dryer operator will monitor the burner operation as part of his regular duties.

Combustion air is supplied through a manifold to three compartments located between the refractory liner and outer steel shell (See Figure 1). From these compartments, the air passes to tuyeres which admit the air tangentially to the refractory. Between the manifold and the compartment are manually controlled valves which are adjusted when the unit is first started and then set. Further adjustments to the air flow are made automatically as the fuel rate varies and the air density changes. Excess air varies with the installation but it is in the range of 60 to 130%.

Energex burners are available in sizes of 6, 15, 27, 45 and 50 million Btu/hr. Each of the systems can be downsized slightly if the demand calls for it.

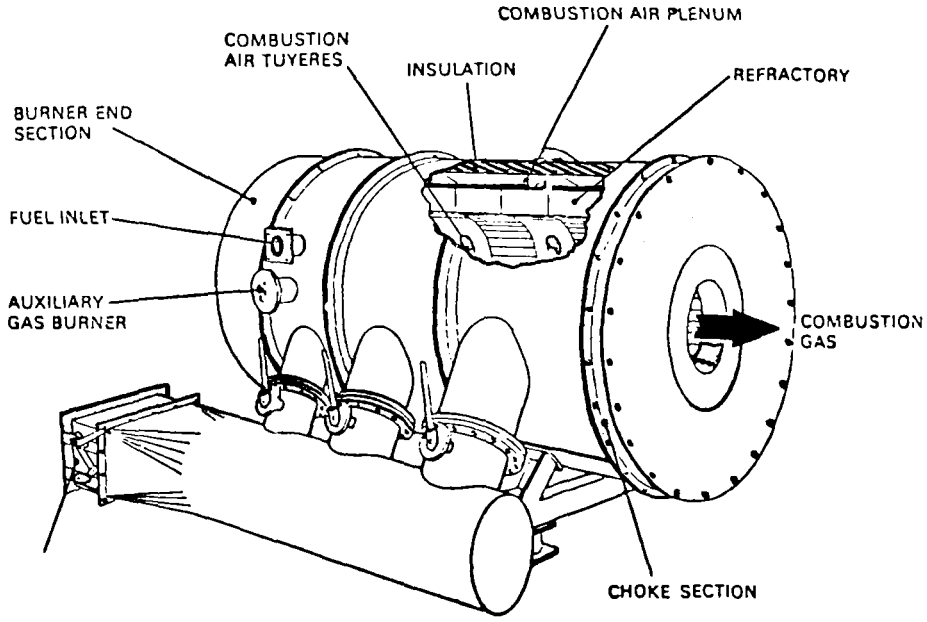

Energex Burner Assembly

Energex System

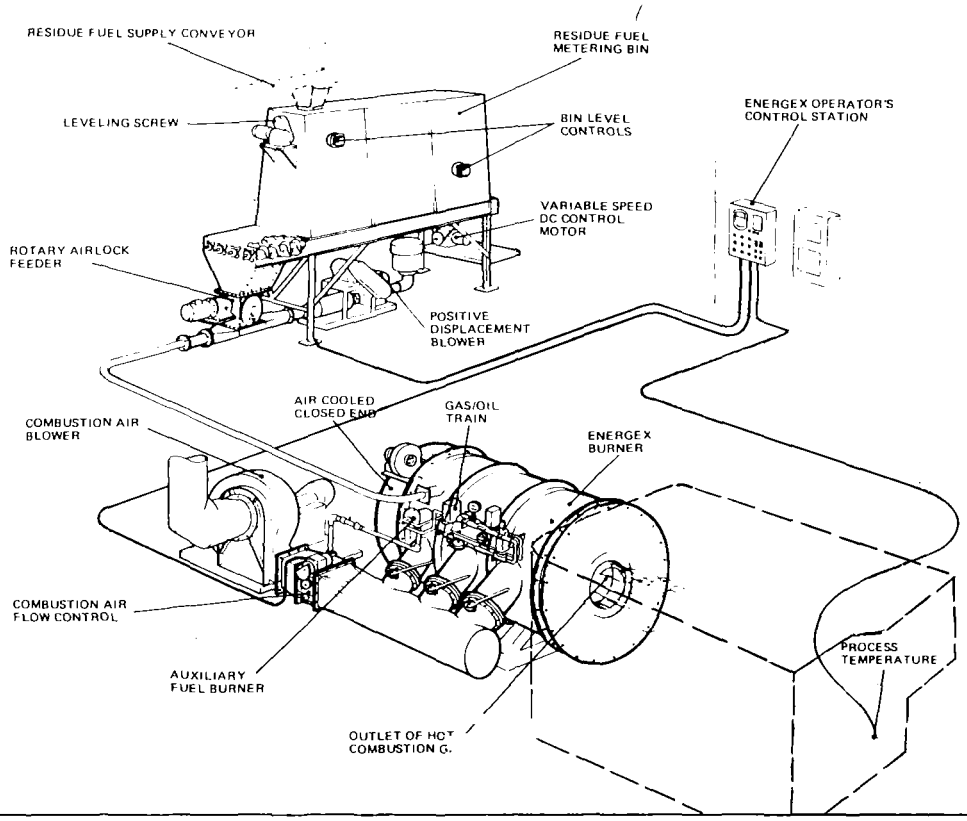

Energex Suspension Burner

Figure 1

TABLE 7

ENERGEX INSTALLATIONS IN CANADA

COMPANY	LOCATION	NO. OF UNITS	MILLION BTU/HR.	OPERATING
Van Isle Moulding	Victoria, B.C.	1	45	Dry kiln and boiler
J.H. Normick, Inc.	La Sarre, Que	2	15	Dry kiln
Clearwater Timber Products	Vavenby, B.C.	2	15	Dry kiln
MacMillan Bloedel	Vancouver, B.C.[1]	2	27	Rotary dryer

[1]System is no longer operated. A shortage of suitable fuel due to a labour dispute resulted in lower dryer capacities. The lower capacity created more problems than not drying - therefore, the system was shut down.

The Energex burner requires electric power and auxiliary fuel. For a 15 million Btu/hr. burner, a total of 51 hp is installed. Forty of that horsepower is used for the combustion air, the remainder for the fuel feed. An auxiliary fuel burner is required to preheat the refractory when the unit is started from a cold shutdown. The burner is operated for about one hour on the auxiliary fuel before full start-up.

The Energex system is designed for operation on wood residue with less than 15% moisture content and particles sized to minus 1/8 inch. The system will not burn other fuels adequately, although the installations at Vavenby have burned fuels with higher moisture contents when no dry fuel was available. No data are available on specific performance factors when wetter fuel is used.

The burners are designed for a turndown of five to one. In some cases, the systems have operated with turndown ratios of eight to one. Thus, the burners are flexible in operation and can meet fluctuating energy demands.

The hot gases from the Energex are clean enough to be used directly in dry kilns and veneer dryers. The ash from the wood

does not remain in the burner, but drops out in the dryer or kiln. The amount of ash produced usually is low because of the clean fuel, and reportedly this has not caused any quality control problems with the product. In a dry kiln, the dried lumber has a coating of fine ash but this is removed by the planing operator. There have been some complaints from planer operators about the ash, but these have been solved by the use of personal dust masks.

The possibility of a recycling dust load cannot be dismissed with the Energex and other suspension burners. There have been reports of ash contamination of working areas where lumber is handled in enclosed areas. While the problem may be real, it has not deterred use of the units, obviously because economics favour it where fossil fuels are scarce or expensive.

The Energex burner produces a hot gas at about 2000°F which can be used in a variety of processes. To date, Energex burners have been installed on direct-fired dry kilns, veneer dryers, rotary dryers, particleboard furnish dryers, stationary and flash dryers, hot hogs, and package boilers. For many applications, the hot gases are diluted with recycled air to cool the hot air suitably prior to its use.

Energex burners have been installed to serve single and multiple kilns with equal success. One unit per kiln is preferred because it simplifies the control system. On units with one burner per kiln, no problems have been encountered with the units producing more energy than required. The burners generally operate continuously throughout the drying schedule with no turndown problems.

The quality of the dried product reportedly is equal to that produced by gas kilns and drying schedules are the same.

The Energex burner does not require a full-time operator. In dry kiln operations, the kiln operator will supervise the burner operation. In the automatically controlled mode, the energy demand on the system controls the fuel-feed rate. The fuel-feed rate in turn controls the combustion air. Changes in fuel moisture content and air density are compensated for automatically. This control

system ensures that temperatures inside the burner do not reach temperatures where slagging becomes a problem.

The installation of an Energex system usually has little impact on other mill operations. In most cases no additional staff is required. The space requirement of the Energex burner is only slightly larger than that required for a gas burner. However, extra space is required for the fuel storage bin, the hammermill and fuel metering bin.

The capital costs for the last two burners (15 million Btu/hr. downsized to 8 and 12) installed in B.C. in 1976 were about $350,000. Increases in costs since that time represent about 20%. This cost includes the fuel-preparation system, the 90-hour storage bin, the fuel-metering bin and buildings to house the burners.

The operating costs for the Energex system at the Vavenby mill are much lower than for the propane system it replaced. Clearwater Timber Products Ltd. also have a mill 20 miles south of Vavenby, so costs between the two mills can be compared. For the Clearwater mill with propane-fired kilns, the fuel costs are $3.18/1000 fbm and the maintenance costs are $0.22/1000 fbm. At Vavenby with the Energex system, fuel costs are $0.14/1000 fbm and maintenance costs are $0.33/1000 fbm. The maintenance costs at Vavenby are dropping as the staff become more familiar with the system and its capabilities.

Most Energex burners have been installed horizontally, which has meant that once every two weeks the ash had to be manually removed. Future installations will have the burners mounted vertically, so that the ash will fall out of the combustion unit and not require regular cleaning.

The kiln operators at Vavenby are very pleased with the operation of the Energex unit. The quality of the dried product is similar to that from the gas-fired kiln at much lower costs. Clearwater Timber Products Ltd. plan to convert their Clearwater kilns to Energex burners.

2. Waycot Systems Ltd.

The Waycot Turbulator was first developed in 1969, at which time two units were installed at lumber mills in Surrey, B.C. These units were used to direct fire dry kilns. One of these units is still in operation and the other has recently been dismantled and sold, since the mill stopped cutting lumber and hence no fuel was available. A third unit was installed at Huntsville, Ontario in 1976.

The Waycot Turbulator is a system similar to the Coen Daz Scroll burner. Combustion is initiated in the Turbulator and is completed in a refractory-lined chamber. The three systems built to date have been made with both the combustion chamber and the Turbulator. The Turbulator alone is now being considered as an overfire burner for hog-fuel boilers.

The system is unique in that it preheats some of the combustion air by pulling it over the outer walls of the refractory prior to being introduced into the Turbulator (see Figure 2). The primary combustion air is mixed with the fuel prior to the burner.

The Turbulators are available in sizes from 20 to 80 million Btu/hr. Four units are offered in that size range.

The installed electrical load for a 30 million Btu/hr. burner is 152.5 hp. This includes the fuel pulverizer, shavings blower, silo unloader, transfer-screen conveyor, metering-bin,feeder, primary and secondary air fans and their distributor fans. The actual operating horsepower requirement is approximately 95 hp.

The Waycot Turbulator will accept a wider range of fuels than other suspension burners. The system is guaranteed to operate on fuels that are sized to minus 1/2 inch with moisture contents less than 40% (wet basis). The system can accept bark and other high-ash fuels provided it has been sized correctly.

For fuels with a moisture content of 40%, the turndown ratio is four to one. On drier fuels, turndown ratios of six to one or higher are claimed to be possible. Supplemental fuel is used to start the burner when it is cold. A fossil fuel is used for about 15

minutes and then wood residues are burned alone.

The particulate emissions are dependent on the ash content of fuel. The temperature in the combustion chamber does get high enough to form some slag. The manufacturers recommend that the slag be cleaned out two or three times per year. At present the slag does not run out of the combustion chamber, so that it must be allowed to cool and then be chipped out at shutdown.

Two sets of emission tests have been performed on the system. For one test, dry planer shavings were burned and the emissions were only 0.004 and 0.007 gr/sdcf. During the second test, clarifier sludge with a moisture content of 50% wet basis and an ash content of 2 to 3% was burned. The particulate emissions were approximately 0.25 gr/sdcf at 12% CO_2. During these tests, the emissions accounted for only about 25% of the ash in the fuel.

The hot gases from the system can be used in a number of processes, including rotary dryers, dry kilns, heat exchangers or a steam boiler.

The system is automated and the fuel feed rate can be controlled by the demand for energy. Periodic attention from a supervisor will probably be required. The manufacturer recognizes this fact and allows for one hour/shift for operation and maintenance in his calculation of operating costs.

The recovery of energy from the system will depend on the application of the heat. It will vary from about 90% for the direct-fired kiln operation to about 70% for the steam-boiler application.

Capital and operating costs are presented in Table 8. The latest system installed at Domtar's Huntsville plant had a capacity of 25 to 30 million Btu/hr. and equipment costs for the burner only were $225,000.

The above unit operates a number of systems. The hot gases are supplied to a rotary dryer and a heat exchanger. The heat exchanger is an air-to-oil type and supplies hot oil to the particleboard presses. The two systems installed in Surrey were direct-firing dry kilns.

TABLE 8

CAPITAL AND OPERATING COSTS FOR

THE WAYCOT TURBULATOR

	SIZE OF UNIT (million Btu/hr. output)			
	20	40	60	80
Installed costs[1]	$400,000	$500,000	$600,000	$700,000
Annual operating costs[2]	14,000	16,000	18,000	20,000

[1]Installed costs include fuel storage and preparation and ductwork to kiln, etc.

[2]Operating costs include electricity, pilot gas, routine maintenance and semi-annual ash cleanout.

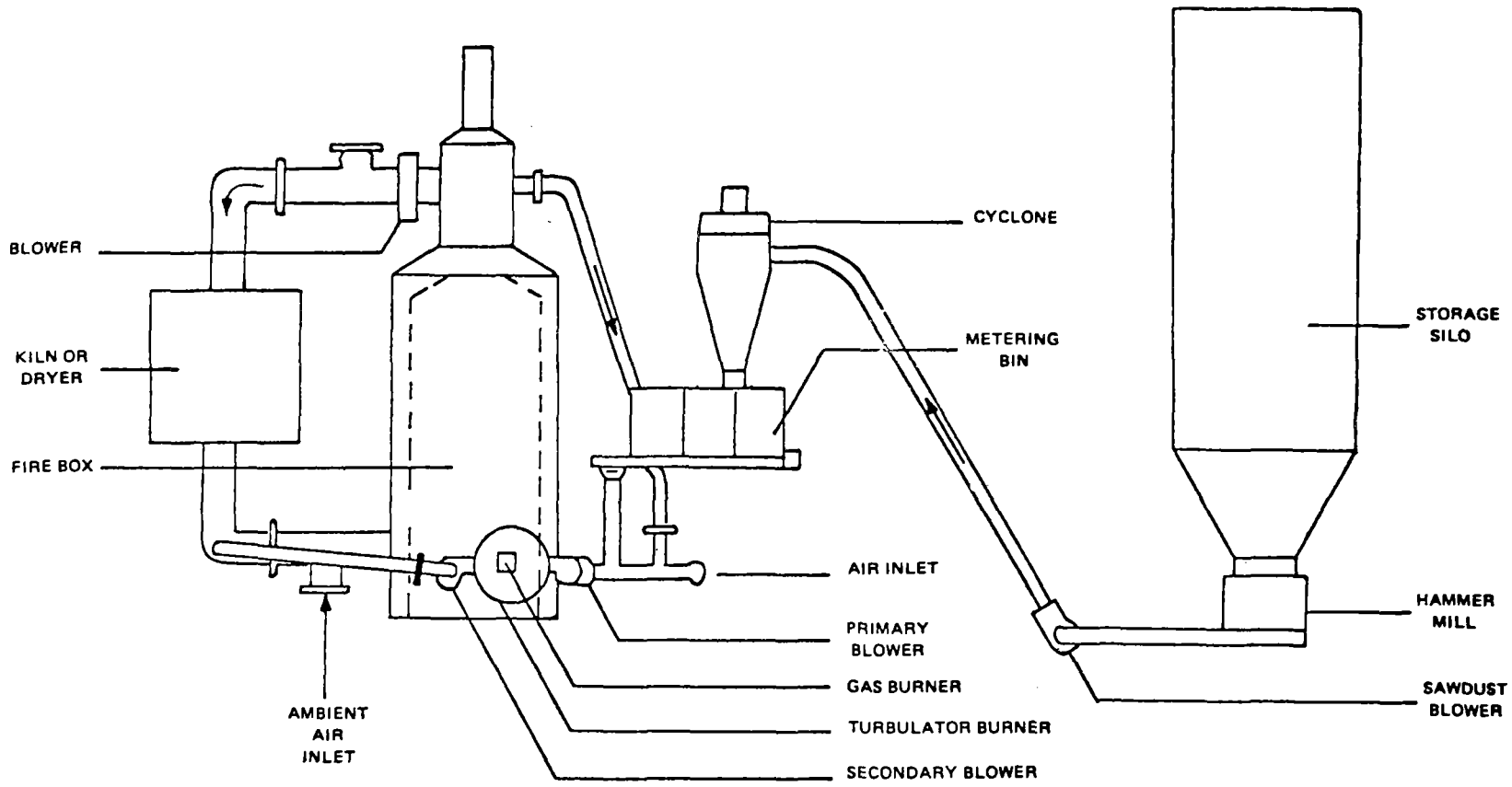

Waycot Systems Ltd.

Suspension Burner

Figure 2

When the Waycot system is used to direct fire a dry kiln, supplementary humidity is stated to be necessary, since the air from the kiln is not recycled as in most wood or gas direct-fired applications. The lack of moisture in the drying gases causes very low wet-bulb temperatures in the kiln. These wet-bulb temperatures are usually lower than the kiln schedule calls for, so extra moisture may be added to meet a schedule. The Waycot system can be supplied with a hot-water coil for producing this humidifying water for the kilns.

3. Coen Company

The Coen Company has been manufacturing and installing wood-residue suspension burners for 13 years. The first installation was made at the Particle Board Plant of MacMillan Bloedel Limited in Vancouver. This unit fires a power boiler on mixed sander dust and natural gas and is still operating successfully. More than 55 units now have been installed on power boilers, rotary dryers, veneer dryers and flash dryers, all firing wood residues. Many other systems have been installed for fuels such as bagasse fines, rice-hull fines, sunflower-seed fines and other organic fines.

The Coen DAZ scroll feed burner is an automated burner for handling fine organic residues. The DAZ dual-air-zone burner is actually two registers in one, with concentric air louvers (core and annulus) which divide the combustion air stream into two counter-rotating streams. As the air steams scrub against each other, they provide turbulent mixing action directly at the point of introduction of the solid fines. The combustion originates well back in the throat of the burner, which maintains a hot refractory and radiates back into the flame body and provides flame stabilization. All burners require additional stabilization from a gas or oil pilot flame. Figure 3 shows a section through the burner.

Coen have recently introduced a wood pilot for the system. This pilot system reportedly reduces the combustion of fossil fuels from the 5 to 10% normally required to less than 1%. Reports from Bohemia Lumber Inc. indicate 2% natural gas use on their Coen burners handling pulverized wood.

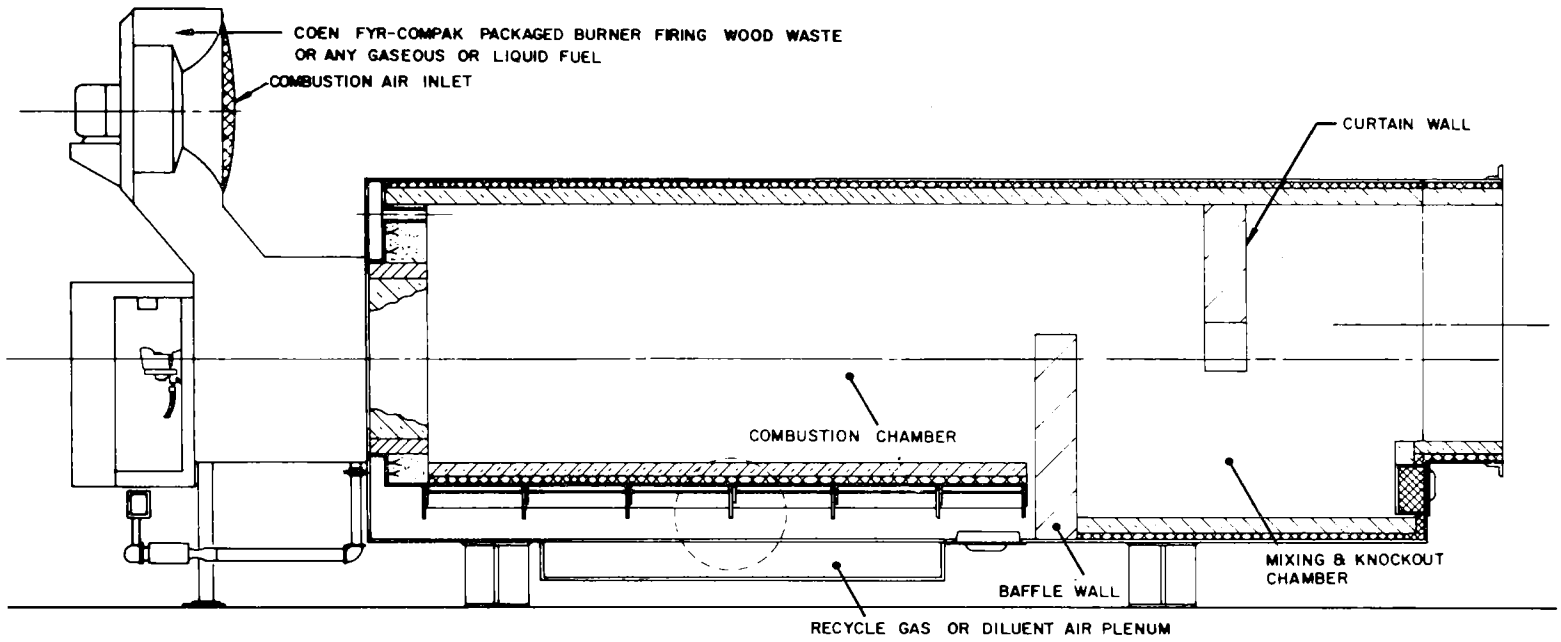

Coen Co.

Daz Scroll Feed Burner

Figure 3

The electrical power requirements for a 20 million Btu/hr. burner are about 7 hp. Additional power is required for fuel preparation and transport.

The DAZ burner is capable of burning wood residues of up to 12% moisture content. The particle size depends on the application of the burner and the amount of residence time available. A particle size of 1/32 inch would require a residence time of about 0.9 seconds. This is typical of the time available in a packaged power boiler. A particle size of 3/64 inch would require about 1.6 seconds. In general, the fuel should be sized to 3/64 inch or less and preferably fuel is drier than 5%.

The burners are normally available with a turndown ratio of three to one. In some applications, such as an air heater for a dryer, turndowns of up to six to one are possible.

Particulate emissions from the units are generally dependent on the ash content of the fuel. For fuel with ash content greater than 0.2%, it is expected that emissions will exceed 0.1 gr/sdcf. The size of the particulate emitted is very small and multiple cyclones and low-pressure-drop wet scrubbers may not be effective in controlling emissions. Measurements at the Bohemia Lumber Inc. particleboard plant in Eugene, Oregon, however, show emission levels from a rotary and two flash dryers to be less than 0.10 gr/sdcf. In these cases, the maximum possible amount of recycle is practised and simple high-efficiency cyclones are used as collectors.

Coen also manufacture air heaters which are basically a combustion chamber for the burner combined with a blend chamber to reduce the temperature prior to using the hot gases. The DAZ burner and air heater have been used with rotary dryers, veneer dryers and dry kilns.

The control systems for the Coen DAZ burners are completely automatic. In general, pneumatic controls are used for wood fuel applications. Several combinations of wood and supplementary fuel controls are available and the one chosen depends on the application.

The DAZ burner with a capacity of 24 million Btu/hr., optional wood pilot, fuel-transport fan and SCR drive for the fuel, will cost about $71,000 fob Vancouver. For a burner in the range of 6 to 20 million Btu/hr., including a grinder and sizing screen, a fuel metering bin, SCR drive and fuel blower, and an air heater, the total installed cost would be approximately $375,000.

Bohemia Lumber Inc. of Eugene, Oregon, reports that a 15 million Btu/hr. burner with a complete feed-preparation section (excluding a dryer) costs about $300,000 installed. The cost of a larger unit andpreparation section would not be markedly greater.

The maintenance requirements for the MacMillan Bloedel Limited system have been very low. In 13 years, only the gas pilot ring and the sanderdust scroll have been replaced. The Bohemia plant reports essentially no maintenance on two Coen burners on feed dryers in four years.

From 1964 to 1975, more than 55 burners were installed in North America. These burners are operated on wood fuel. In addition, Coen has made thousands of installations of fossil-fuel combustion systems.

Coen claim that periodic cleanout of ash from the burner and its associated combustion chamber is necessary. It is likely that over a period of time some ash will build up and require some cleaning, but it is possible that this frequency is lower than with other suspension burners since the total combustion chambers tend to be larger. Some wood fuels or combinations of wood and fossil fuels have resulted in slag formation. Coen recommends not using heavy fuel oil as a supplement to wood because of the slag formation. It is claimed by Bohemia that the key to slag-free operation is control of temperature near the refractory in the combustion space. Thus recycle of gases in drying processes to bring air heater temperature to about 950°F is desirable.

4. Peabody Gordon-Piatt

The company manufactures a dual-fuel suspension burner (see Figure 4). A solid fuel, such as dry, sized wood residue, is combined with a fossil fuel, such as natural gas or fuel oils. While

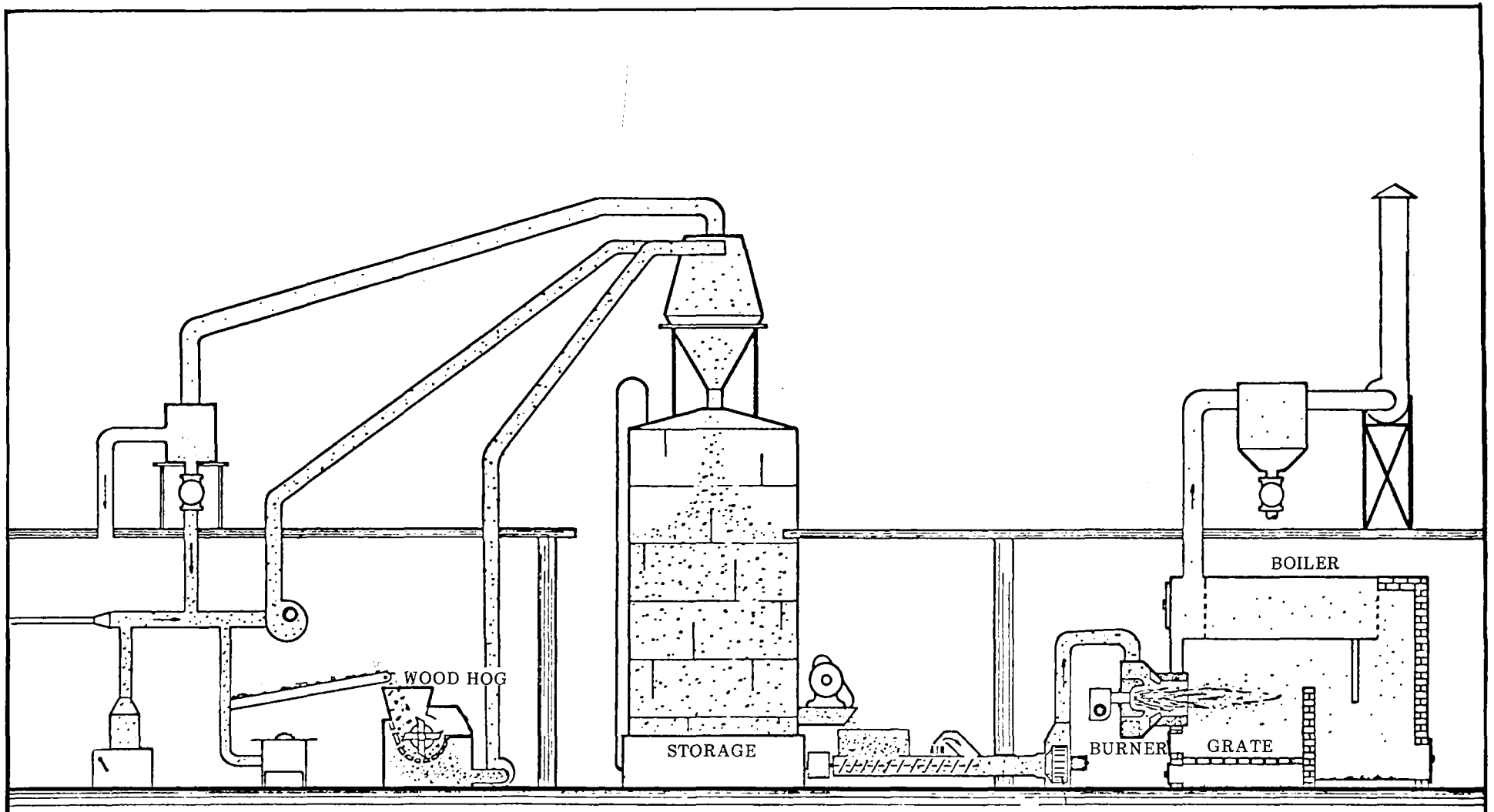

Peabody Gordon – Piatt

Wood Burning System

Figure 4

the solid fuel is the primary fuel, the units can be designed to carry the full load on the supplementary fossil fuel as well.

The burners are available in sizes from 9 million Btu/hr. to 36 million Btu/hr. Larger units that approximately double the energy output are available, but the higher output comes from the auxiliary fossil fuel. More than 40 burners are now in operation.

The fuel must be sized to minus 3/4 inch and with a moisture content of less than 15% on a dry basis (13% wet basis). To meet an emission level of 0.05 gr/sdcf at 12% CO_2, the burner assembly must be equipped with a collection device. Seventy-three percent of the particulate by weight is less than 10 microns.

The burner was designed primarily for use in small power boilers. However, the hot gases could be used in a dry kiln or veneer dryer, if a combustion chamber was attached to the burner.

Several control systems are available for the burner, ranging from simple on-off controls to full-modulated control.

Burner-to-boiler efficiencies of 75% to 80% are normally used when burners are being sized for a system. The heat-release rates for the combustion zone of the boiler are kept low to minimize refractory maintenance.

5. Guaranty Performance Co. Inc.

The company manufactures and markets a suspension burner, based on principles similar to the Energex system. The Roemmc burner differs from the Energex in that it uses high-excess air (250% versus 100%) and utilizes a particulate-collection cyclone after the burner, but prior to the utilization of the gases (see Figure 5).

A total of five units are in operation or under construction at the present time. These systems fire boilers, rotary dryers and tube dryers.

The systems are automatically controlled. The temperature of the gas is used to control the air into the burner. By keeping the temperature low with the high excess air, the problem of ash slagging is eliminated. The ash from the system is eliminated in a

Guaranty Performance Co.

Roemmc Burner System

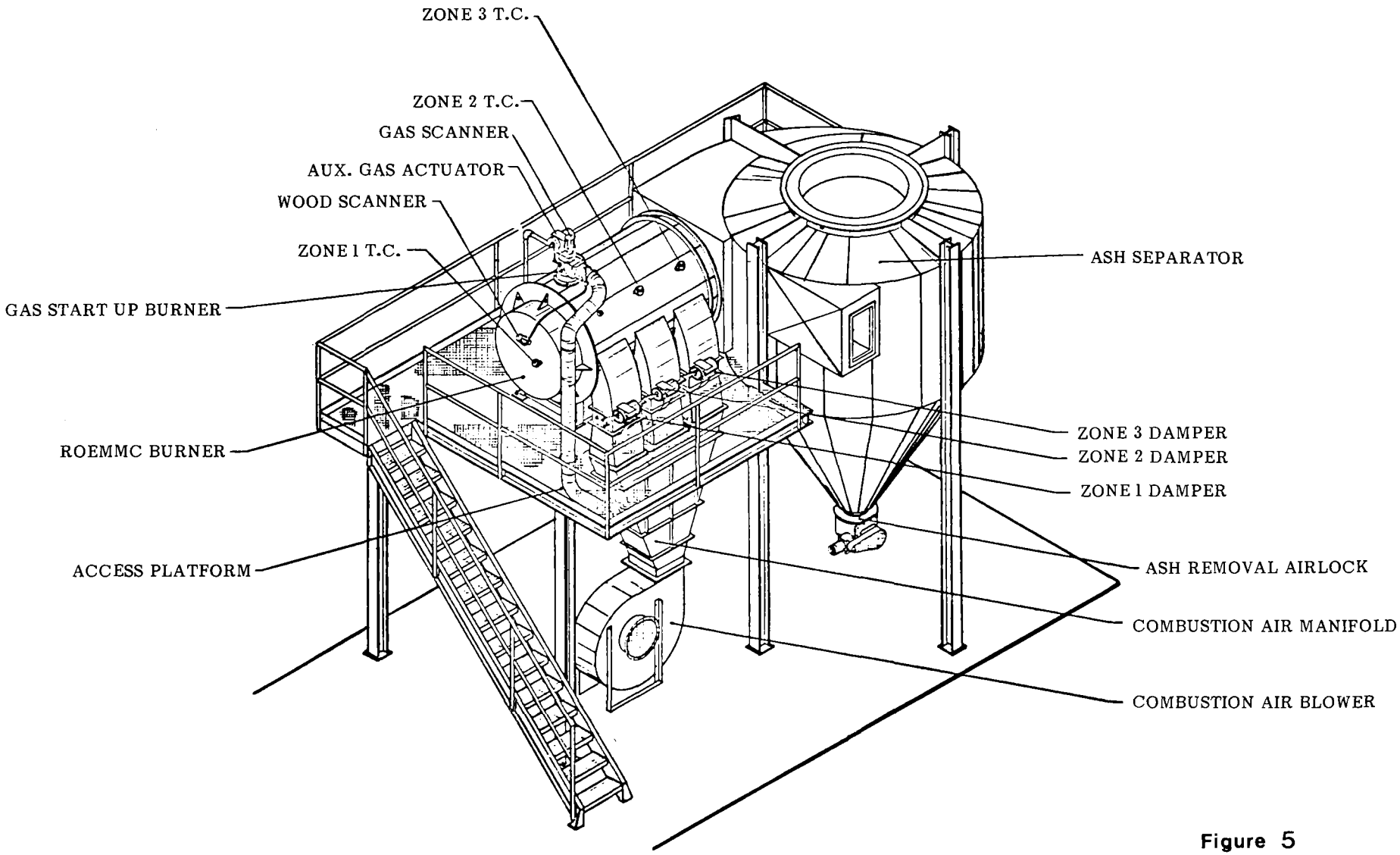

Figure 5

cyclone located at the end of the burner. High ash or dirty fuels can be used in the burner with the cyclone and still have environmentally acceptable emission. Tests done on this system, when it was burning pulverized plywood trimmings, showed particulate emissions of 0.05 gr/sdcf at 12% CO_2.

The fuel must have a moisture content of less than 15% and it must be sized to minus 1/8 inch. It is not necessary to use white wood, processed bark being acceptable for a fuel.

The system is not primarily a disposal device, so maximum effort is made to burn the fuel efficiently. The thermal efficiencies will be slightly lower than for the Energex because the units use more excess air, and, being physically larger, incur higher heat losses.

The system is stated to be more expensive than an Energex burner because of the emission control equipment. A 15 million Btu/hr. burner system complete from the source of wood residues, but not including the 96-hour storage bin, is stated to cost approximately $100,000 installed in the United States. The company does not know what the Canadian costs would be, but they are likely to be in the order of $175,000. If a dirty wet fuel, such as bark, were used, the necessary drying equipment could double the price.

The total system requires more space than an Energex, but has the advantages of reported lower maintenance and a wider range of acceptable fuel.

B. Fluid Bed Combustors

1. Energy Products of Idaho
2. Incinergy
3. Combustion Power
4. Johnson Boiler
5. Copeland
6. Dorr-Oliver

SUSPENSION BURNERS

	Energex	Waycot	Coen	Peabody Gordon-Piatt	Guaranty Performance
[1]Stage of Development	a	a	a	a	a
Emissions less than 0.100 gr/sdcf?	?	yes	yes	yes	yes
Is System Fully Automated?	yes	yes	yes	yes	yes
Maximum Moisture Content, % mc (wet)	15	40	12	12	15
Maximum Fuel Size	1/8"	1/2"	3/64"	3/4"	1/8"
Sizes Available x 10^6 Btu/hour					
0-10	X		X	X	X
10-20	X		X	X	X
20-30	X	X	X	X	X
> 30	X	X	X	X	X
[2]Costs, $\$10^3/10^6$ Btu					
In Size 0-10					
10-20					
20-30	12	20	14	9*	7*
> 30		9			
Turndown Ratio	5	4	3	5	5
Form of Energy	-------- hot gases ----------				
Is Auxiliary Fuel Necessary?	No	No	Yes	Yes	No

[1]a - Proven
b - Prototype
c - Pilot
d - Experimental

[2]* indicates capital costs only, not including installation

(1) Energy Products of Idaho Inc. - Fluid Flame

The company (EPI) has developed a fluid-bed combustor for wood residues. In the three western provinces and the 12 western states sales are handled by EPI. In the rest of North America, sales are handled by York-Shipley Inc., a licensee. Discussions are underway at the present time with companies in Japan and Sweden for further licensing agreements.

The combustor is classified as a fluid-bed unit, but some of the combustion takes place above the bed. Depending on the size, distribution and density of the wood, from 40% to 70% of the combustion occurs in suspension above the bed. The residues that are more difficult to burn fall to the fluid bed and are combusted there. This combination of suspension burner and fluid-bed combustor results in a unit with the advantages of both types of burners.

The burners are large cylinders from 7.5 ft. to 18 ft. in diameter and 30 ft. to 40 ft. high. The outer shell is mild steel (see Figure 6). Insulation is supplied by 2-inch insulating block and 4 inches of castable refractory. The individual units are available in sizes up to 120 million Btu/hr.

The depth of the sand bed varies with the installation between 15 and 24 inches. The fluidizing air is supplied through nozzles in the bed (see Figure 6). A large 18-ft. diameter unit will have between 900 and 1,000 nozzles. The units are automatically controlled. Even systems which fire high-pressure steam boilers in the United States do not have operators.

The system requires electric power and auxiliary fuel. The fuel is required to preheat the bed, when the unit is started from cold. Start-up requires about one hour to heat the bed to 900°F. Shutdowns of up to 24 hours can be tolerated and the unit can be restarted with no auxiliary fuel. The electrical power consumed depends on the depth of bed and the pressure requirements of the boilers or dryers. A 10-ft. diameter unit will have a typical installed electrical load of 70 hp.

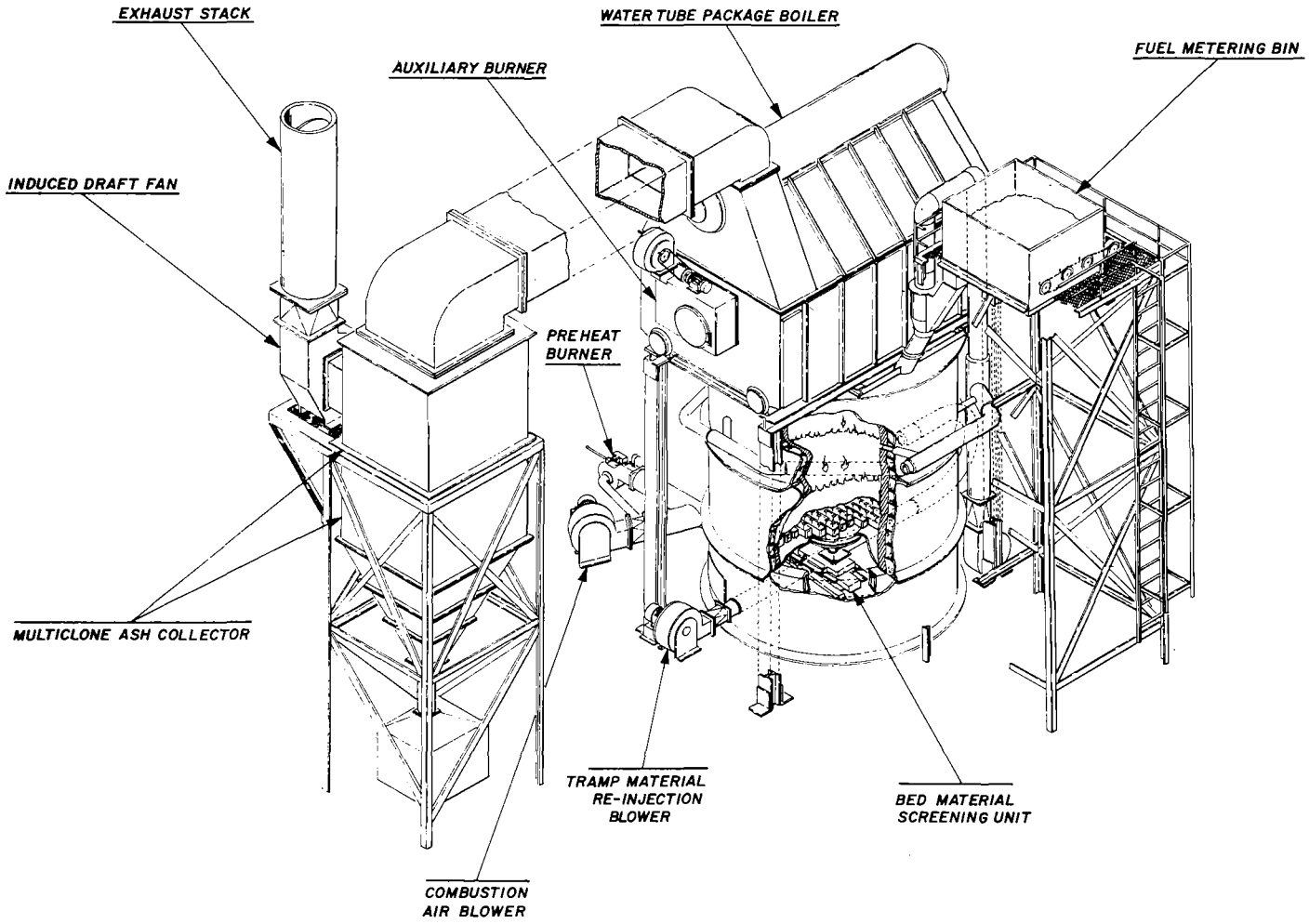

Energy Products of Idaho

Fluid Flame – Fluid Bed Combustion

Figure 6

These Fluid Flame units are able to combust fuels with moisture contents of up to 65% (wet basis). The fuel is hogged to minus 3 inches. When the fuel is hogged to this size, the control system is able to modulate the heat output better. One of the systems operates on olive pits; another feeds wood and coal. Tests are being undertaken to utilize tomato seeds and skins, peach pits and coal.

The Fluid Flame unit reportedly has a turndown ratio of three to one. In boiler applications, it has been possible to operate the units in an on-off cycle, which increases the effective turndown ratio.

All of the units have cyclones or multiple cyclones installed to reduce the ash carryover. The collection devices are located after the boilers or after blend air in the case of dryers, so that they can be manufactured from mild steel.

Emission tests done on one of the first units with cyclones showed particulate levels of less than 0.100 gr/sdcf at 12% CO_2 for four tests. The units are environmentally acceptable in all of the western states where they have been installed.

The energy is produced in the form of a hot gas at 1,700 - 2,000°F. These hot gases have been used in steam boilers, veneer dryers, and dry kilns. In some cases, the units have been retrofitted to existing boilers with good success.

The Fluid Flame units are totally automated. None of the installations in the United States requires an operator. The units are equipped with annunciators to call operator attention to unusual operating conditions. In Canada, a steam engineer would be required for all boiler systems that produce steam above 15 psig.

Capital costs for the combustion unit itself are in the order of $35,000 per ton of fuel per hour. This corresponds roughly to $70,000 for a 30 million Btu per hour unit. If installation and fuel storage bins are included, the cost is about $100,000 per ton per hour. The cost is site specific and may vary considerably, depending on fuel treatment required and on local facilities for equipment installation.

No firm data are available on operating costs. It is expected that the units would require more attention than a gas burner, but, since they are disposal devices also, the maintenance is probably equal to that of a conical incinerator. The refractory is expected to have a life of eight to 10 years. The oldest unit has been in operation for four years and only spot maintenance has been required on the refractory.

A total of 22 units are under construction or are operating. A total of 18 years operating time has been logged on these units. In general, the operators are very pleased with the performance of the units.

The sand bed with contained ash is removed automatically from the unit. The material is passed over a vibrating screen and the material suitable for reinjection is put back into the bed. The material removed from the bed is usually gravel and rocks present in the hogged fuel or fused ash. Much of the fine ash is carried through the system and collected in the multiple cyclones.

The overall efficiency of the system has not been accurately determined, since most operators view the unit as a disposal device. In many of the installations some of the steam produced is wasted, since it is not needed at the present time.

The Fluid Flame combustor is viewed as proven technology with the capability of handling a range of fuels, including wet and relatively coarse material.

(2) Incinergy Systems Ltd.

The company, a wholly owned subsidiary of Fryer-Cruickshank Kilns Ltd., have developed a fluidized shallow-bed combustor specifically for wood residues. They have designed, constructed, and tested one system. The prototype system is not automatically controlled and requires constant supervision from the operator.

The combustor has been described as a fluid-bed unit. However, like the Energy Products of Idaho system, much of the combustion takes place in a suspended vortex above the bed. In addition, there is a baffled secondary combustion chamber, with an auxiliary fuel burner, located above the primary combustion chamber.

The prototype was designed to handle 1.5 tons of wood per hour (approximately 12 million Btu per hour). It has been successfully operated up to 5 tons of wood per hour. The system is able to handle larger loads than it was designed for because much of the combustion takes place in suspension above the fluidized bed.

The prototype system has been operated intermittently for two years. The unit consists of a refractory-lined cylinder seven feet in diameter and 22 feet high. The fluid bed material consists of 9 inches of proprietary material known as Incinergite. It is said to be thermally stable up to 3,000°F. The prototype has no automatic means of cleaning the bed material. It is planned that future models will incorporate an automatic bed cleaning system.

The combustion air is split between the fluidizing air and overfire air. The manufacturer claims to have developed fluidizing air nozzles which have 30% less pressure drop than conventional systems. The overfire air is supplied through a network of 16 nozzles.

The prototype has an installed power requirement of 102 hp. One-half of this is required for the fluidizing air.

The wood residues are fed into the chamber by means of a screw feeder and an air curtain. The prototype has one screw, but future models are to have two screws, one for dry material and one for wet material.

In addition to the electric-power requirements, an auxiliary fuel, such as propane or natural gas, is required to start the unit. The refractory must be brought up to temperature slowly to avoid thermal shocks. The start-up cycle for the prototype takes five hours and consumes 22 gallons of propane. The shutdown of the unit follows a similar cycle for five hours.

The system is claimed to be capable of handling fuels with a wide range of moisture contents. It is claimed fuels with moisture contents up to 65% (wet basis) will burn autogenously. The fuel must be hogged to a size less than three inches for the prototype. Production units will be sized to accept some larger material. All production units will incorporate a screen of proprietary design to select the proper-size fuel.

The prototype has been operated at feed rates from 300 lb./hr. to 9,600 lb./hr. of similar fuels. The manufacturer believes the turndown ratio will be between five and eight to one. It is unlikely that the bed can be kept fluidizied over this wide range.

The prototype is not equipped with any particulate-emission control devices other than the secondary afterburner chamber. Two particulate emission tests have been performed. The emissions were in the order of 0.25 gr/sdcf at 12% CO_2. The particulate consisted of true ash and some unburned particulate. Changes in the operating procedure may reduce the emission of the char component.

The energy from the unit is available in the form of hot gas. The prototype makes no effort to utilize this energy. The manufacturer is proposing to use air-to-air heat exchangers to supply the energy to a dry kiln.

There has been a control system designed for the unit, but it has not been tested. The prototype requires the constant supervision and adjustment of one man while it is operating. Future units would be automatically controlled and require only occasional supervision from the kiln operator.

Several proposals have been made on units ranging from three tons/hour to eight tons/hour. The proposals have been for turn-key packages, including disc screen, storage bin, metering bin, conveyors, vessel, controls, building and foundations. The costs vary somewhat depending on location but are in the range of $100, 000 per ton/hour. There is no reliable information concerning operating costs since only the prototype exists.

The manufacturer claims that 95% of the energy from the wood is available in the discharged hot gases. The actual energy utilization in a production unit will be less because of further losses in ducts and heat exchangers.

Many of the manufacturers' claims about the unit cannot be substantiated by test data. Some of the claims regarding the amount of excess air, the bed temperature and the purpose of the secondary combustion chamber are inconsistent with operating experience with similar units. The system requires further development before it could be considered for a commercial operation.

(3) Combustion Power Company Inc.

This firm has been involved in fluid-bed combustion technology for the past five years, originally with the intent of

burning domestic refuse to produce hot gases for use in a turbo-generator. Subsequently, the unit was applied to wood wastes and the first installation was made at the Longview mill of Weyerhaeuser Co. to dispose of log-yard cleanup, flyash char, and clarifier sludge. A second system has been installed by Weyerhaeuser at Cosmopolis.

The one system in operation was placed on line with no increase in staff. The system feeds hot gases to an existing boiler. A cyclone is used to clean the gases after the boiler. A specifications summary is presented in Table 9.

The combustion unit has been designed to burn very difficult fuels. The maximum feed rate is 331 lb. of dry fibre per minute (20,000 lb./hr. or about 150 million Btu per hour). For every pound of combustible dry fibre, the system reportedly can handle 0.67 lb. of rocks and dirt, 2.0 lb. of moisture, 0.1 lb. of carbon ash and 0.1 lb. of inert fuels (see Figure 7).

The recoverable energy at normal operating conditions is 60% of the energy input. There will be a further drop in conversion efficiency when the hot gases are converted to steam.

A typical cost for a complete system installed, including materials handling, is about $1.5 to 2.0 million. The prices are applicable to the minimum practical size of about 50 million Btu/hr. or 9,000 lb. per hour of dry wood input, and represent a poor grade of fuel, such as log-yard cleanup. A system using a higher quality fuel (hog fuel) would be economic in the range 20 to 150 million Btu per hour. The smaller of these units installed on a turnkey basis might cost about $500,000.

The electric power requirement for the Longview system is about 700 h.p.

TABLE 9

COMBUSTION POWER COMPANY FLUIDIZED BED
LONGVIEW SPECIFICATION SUMMARY

Debris flow	
Moisture (% wood)	55
Combustible (lb/hr)	11,892
Moisture (lb/hr)	24,240
Inerts (lb/hr)	7,932
Fly carbon (char)	
Combustible (lb/hr)	1,188
Inerts (lb/hr)	1,188
Total fuel flow (lb/hr)	46,380
Burner Specification	
Internal gas flow ave. (sq.ft.)	381
External Diameter (ft)	29'9"
Overall Height (ft)	25'2"
Bed Height (ft)	2
Operating Exit Temperature (°F)	1,800
Excess Air (%)	65
Installed Power (hp)	700

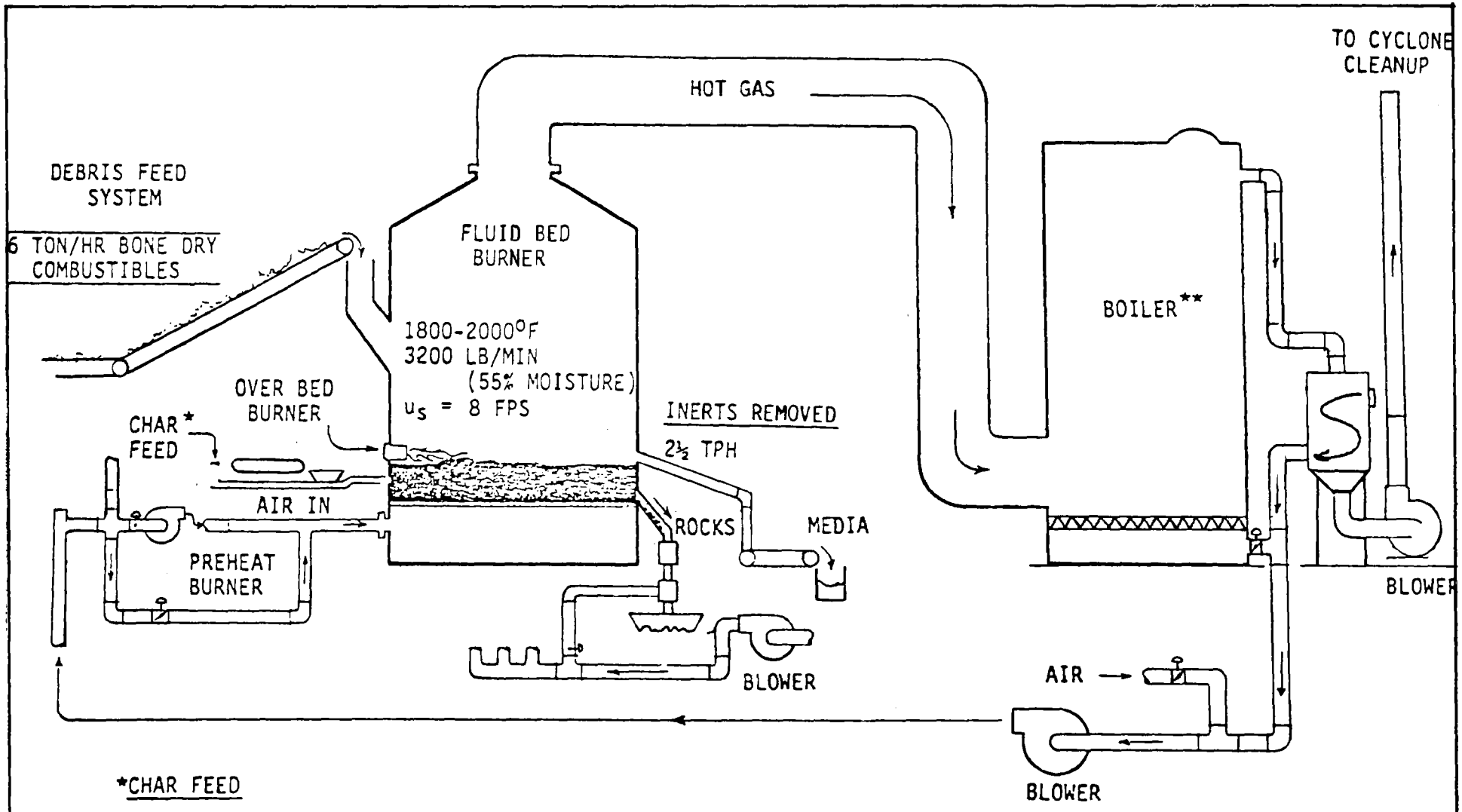

*CHAR FEED

½ TPH - ORGANIC
½ TPH - INORGANIC

**STEAM OUTPUT

55% MOISTURE 55,000 LB/HR
40% MOISTURE 60,000 LB/HR

Combustion Power Co.

Fluid Bed Combustor

Figure 7

The system can be regarded as being in the commercial prototype stage undergoing plant testing. Some of the problems being encountered in the first two units are due to the difficult material that is being burned. This is one of the only two systems evaluated that can accept log-yard debris without pretreating it.

(4) Johnson Boiler Company Inc.

The company has a technology and patent license with Combustion Systems Limited of the United Kingdom. Johnson are currently developing coal, oil, and gas fluid-bed combustors for steam generation. A prototype unit is now undergoing testing.

It is expected that a full product line of units from 3,300 lb. per hour to 40,000 lb. per hour of steam will be produced. While the unit was designed primarily for coal, it is expected to find applications for wood residues.

The system is being designed for a turndown ratio of three to one. The ash will be removed automatically from the bed and the system will be fully automated.

The system is regarded as being in the unproven prototype stage.

(5) Copeland Systems Inc.

Copeland Systems Inc. have been developing fluid-bed technology for 15 years. The systems have been used in the pulp and paper industry, steel industry, petroleum industry and others for the disposal of waste effluents. Only one system has been installed for the combustion of wood residues, at Great Lakes Paper Company at Thunder Bay, Ontario. It was installed in 1972 and is still being used to dispose of sludge and reclaimed bark. The ash content of some of this material is very high.

The one wood-waste system has a capacity of 140 million Btu/

hr. It has an installed electrical load of 1240 hp. There is no heat recovery from the system. A wet scrubber is used to clean the gas stream prior to discharge. The ash removal from the bed is performed manually when required, generally every three weeks.

There reportedly have been many problems with the system and Great Lakes Paper would probably not install a second unit for a similar type of waste. The cost for the system, which was installed in 1972, was about $750,000.

(6) Dorr-Oliver Inc.

The company has been involved in fluid-bed technology for many years. The fluo-solids reactors are used to dispose of sewage sludge, and are applied in many process industries similar to the Copeland systems. Dorr-Oliver have expressed some interest in adapting their system to wood residues, but have not yet performed any tests with wood.

A Dorr-Oliver fluid-bed sewage sludge incinerator is operated in Richmond, B.C., by the Greater Vancouver Regional District.

C. Multiple-Chamber Combustors

1. Basic Environmental Engineering Inc.
2. Consumat
3. Lamb Wet Cell
4. Envirometrix
5. Anga and Värme
6. Berg and Starck
7. Konus-Kessel

(1) Basic Environmental Engineering Inc.

The company has been producing multiple-chamber incinerators for wood and municipal residues since 1970. Twenty-five systems have been installed since that time. One unit has operated on

two tons per hour of wood residues since 1972. In the past two years, units have been available with packaged power boilers connected.

Units are available in sizes ranging from 2.4 to 80 million Btu/hr. This is equivalent to burning dry wood at rates from 300 lb./hr. to five tons/hr. The maximum moisture content acceptable is stated to be 43% (total weight basis).

The systems are composed of the main combustion chamber, the reburn chamber, the tertiary chamber and an integral water wall boiler. The system utilizes very strict control of air flow to each chamber. The main chamber uses stoichiometric air with low underfire air, so that particulate entrainment is minimized. Only particles sized less than 100 microns escape to the secondary chamber.

The system uses no particulate emission devices. The unit installed in Maryland is meeting the requirement of 0.03 gr/sdcf at 12% CO_2 while burning wood. This wood is free from sand and dirt.

The ash is removed from the main chamber by refractory lined bomb-bay doors which drop the ash directly into tote bins.

The loading of the combustor involves a combination of manual and automatic control. The wood residues, which do not have to be hogged, are manually loaded into a hopper bin. From the hopper, the fuel is transported to the main combustion zone by a ram feeder. Inside the main combustion zone, an optional powered plug spreader, refractory covered and cooled, is used to spread the waste uniformly over the refractory hearth. Hogged fuel can feed to the furnace in an automatically compacted form of three to four inch diameter.

FLUID-BED COMBUSTORS

	Energy Prod. of Idaho	Incinergy	Combustion Power	Johnson Boiler	Copeland	Dorr-Oliver
[1]Stage of Development	a	b	b	c	a	a
Emissions less than 0.100 gr/sdcf?	Yes	No	?	?	?	?
Is system fully automated	Yes	No	Yes	No	Yes	Yes
Maximum moisture content, % mc (wet)	65	65	52	?	65	([3])
Maximum fuel size	3 in	3 in	3 ft	?	?	([3])
Size available x 10^6 Btu/hour						
0-10				X		
10-20	X	X				
20-30	X		X			
> 30	X				X	
Costs, $\$10^3/10^6$ Btu						
In size 0-10						
10-20	10*					
20-30			25			
> 30	10	12.5				
Turndown ratio	3	5	3	3		
Form of energy	---------- hot gases ----------					
Is auxiliary fuel necessary?	No	Yes	No	No	No	-

[1]a - Proven
b - Prototype
c - Pilot
d - Experimental

[2]*Indicates capital costs only, not including installation

[3]No reliable operating data for wood fuels

(2) Consumat Systems Inc.

The company manufactures a multiple-chamber incinerator which has found wide acceptance for the incineration of municipal wastes. Many of the units have heat-recovery systems associated with them. More than 2,000 units are stated to be in operation in North America, about 100 of which have energy recovery units associated with the incinerator. Of all these systems, only one operates on 100% wood residues. This plant does not have energy recovery.

The incinerators are available with manual or automatic fuel loading and ash removal. The manufacturer claims that for plants up to 50 tons/day, 12 hours per day of supervision is required.

The Consumat incinerator uses an auxiliary fuel burner in a secondary chamber to control the carryover of combustible material (see Figure 8). For municipal refuse, the amount of fuel used varies from 1.0 to 2.0 million Btu per ton of material processed.

The Consumat systems are capable of combusting any type of wood residues. Any moisture content can be handled because of the auxiliary fuel burners. Pieces as large as railway ties have been successfully burned in trial tests.

Consumat systems which produce steam from municipal refuse are claimed to have conversion efficiencies approaching 70%. This appears to be a high efficiency for a system which is designed primarily as an incinerator, and should be confirmed.

A similar system is manufactured by the Sunbeam Equipment Corporation. This incinerator has also been used primarily for municipal refuse.

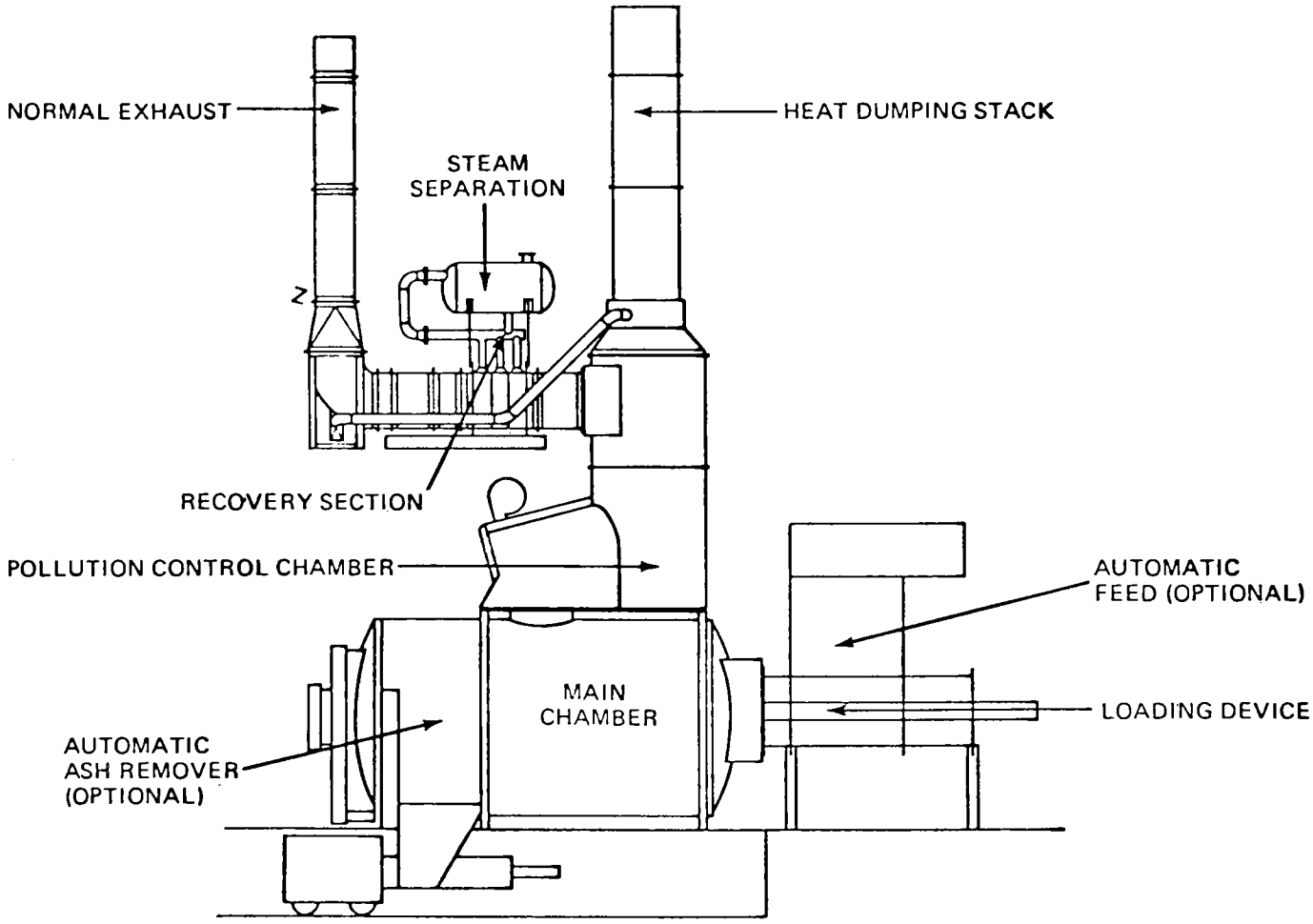

Consumat Inc.

Consumat Multiple Chamber Incinerator

Figure 8

(3) Lamb-Cargate Wet-Cell Burner

Lamb-Cargate Industries, in conjunction with Weyerhaeuser and Universe Tankships, has developed a two-stage combustion unit. In the first stage, gasification of the wood residues takes place under starved air conditions. In the second stage, the combustible gases are burned to produce a hot clean gas. See Figure 9 for a section of the burner system. The wet-cell burner injects hog fuel through the burner base where it spreads over pinhole grates to form a conical pile.

Undergrate air, preheated by exhaust gases, and overfire air, totalling less than stoichiometric, are supplied to this lower chamber. The preheated air (items 7 and 8 of Figure 9) helps to dry the hog fuel, but also oxidizes the fixed carbon present, thus generating sufficient heat of combustion to drive off the volatiles.

Before leaving the lower chamber, hot gases rising from the fuel bed are subjected to a "scrubbing" action provided by a series of high-pressure "swirl" air jets (item 9) entering the lower chamber tangentially, just below the roof. This feature is designed to separate any particulate which many be entrained and centrifugal action carries them out to the walls. The fixed carbon particulate completes oxidation as it is swept by the swirl air downward to the pile. Any ash, sand, etc. falls to the outer edges of the pile for periodic removal from the floor of the lower chamber.

Temperatures in this chamber rarely exceed 1600°F which ensures that even low-fusion-point ashes do not form any solid clinker and the refractory will last.

In the upper chamber (item 4), the volatiles driven off in the primary chamber are burned with minimal excess air, typically less than 15%. To achieve this, the chamber is cylindrical and double-walled with an inner refractory lining.

1. FEED MECHANISM
2. FOUNDATION
3. PRIMARY CHAMBER
4. SECONDARY CHAMBER
5. BLEND BOX
6. HOT GAS DUCT
7. HEAT EXCHANGER
8. PRIMARY AIR SYSTEM
9. HIGH PRESSURE AIR SYSTEM
10. SECONDARY AIR SYSTEM
11. BLEND AIR

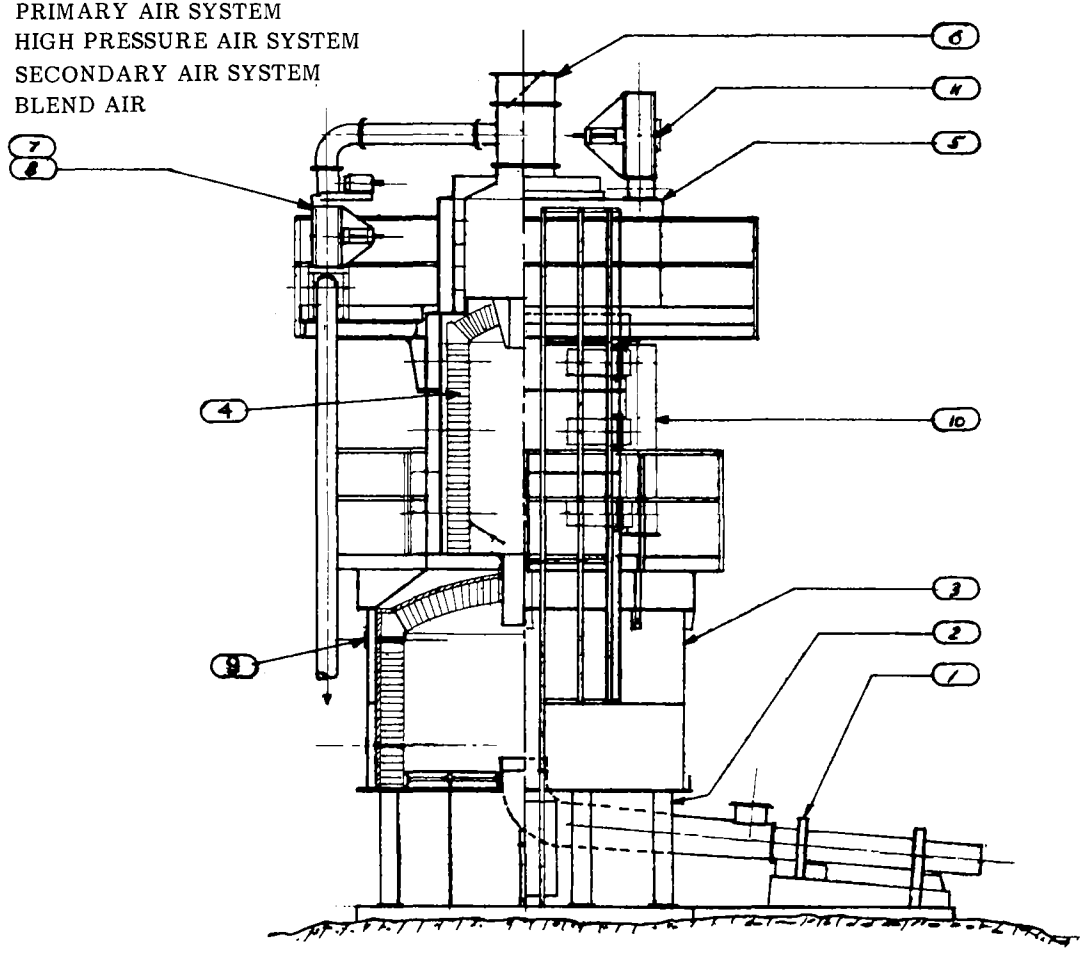

Lamb Wet Cell Burner

Figure 9

Combustion air (item 10), preheated by passing between the outer shell and this hot refractory, enters the chambers through a series of tangential tuyeres. As in a dust-collection cyclone, most of the air enters the upper chamber near the top, promoting a strong outer vortex of relatively cool air. This vortex spirals down inside the refractory lining to the lower end, where it meets with hot volatiles entering from the primary chamber. Rapid and complete combustion takes place in the inner vortex rising toward the central "tubs" at the exit from this upper chamber.

This configuration achieves several ends:

(a) Preheating of the combustion air which also cools the refractory from outside;

(b) Excellent turbulent mixing of volatiles for complete combustion within the burner;

(c) Protection of the refractory inside surface by the downward airstream which soaks up heat radiating from the intense flame in the inner vortex;

(d) Avoidance of carry-over when at off-design during transient conditions, since the cyclone "tub" at exit, which stabilizes the boundary between inner and outer vortices, enables chance particulate in the upper chamber to be automatically skimmed off and returned to the lower chamber.

Where gas exit temperatures from the Wet-Cell Burner are higher than required for a particular application, ambient air is added in a blend box. This reduces the stack temperature to the required level by dilution cooling. This component has also been incorporated in the pilot installation.

The controls of the burner are simple. The primary control is the amount of air admitted to the lower chamber. This is automatically regulated, so that the mixture of volatiles and water vapour passing to the second chamber is at optimum temperature, generally below 1600°F.

The secondary control then admits the necessary combustion air to the upper chamber, so that products of combustion leave the upper chamber at a steady temperature. The maximum exit temperature attainable for a given fuel will be dependent on moisture content. As a rough guide, 65% m.c. fuel would permit about 1700°F and 35% m.c. about 2600°F. Any desired temperature below these maxima can be maintained by the blend box.

The system was designed for a turndown ratio of five to one. The first system has successfully operated at turndown ratios of up to 10 to one. In addition the response time of the burner is claimed to be only five seconds.

One prototype unit was constructed and tested in Vancouver. That unit has now been shipped to Engen, B.C., where the gases are being used to fire two dry kilns. The unit has a rated heat output of 25 million Btu/hr. The same kiln schedule is being used for wood firing as when the kilns were gas fired. The lumber is drying several hours quicker. However, this probably occurs because the wood burner can keep up with the kiln demand, where the gas burner output was always lagging behind the heat demand.

The prototype was automatically controlled, with the exception of the ash removal from the system. An automatic ash-removal device is currently being designed, however. With the prototype the ashes must be raked out by hand once every 24 hours. The time required for this is one hour from start of burndown to the unit being back on line.

The use of two chambers, low underfire air rates and underfired stoker, results in low particulate emissions from the system. Emissions of 0.16 gr/sdcf on wet fuel and 0.06 gr/sdcf on dry fuel have been measured with the unit.

The Lamb Wet-Cell burner is capable of burning fuel up to 65% moisture content (wet basis) and hogged to minus 3 inches. At the present time, the lowest moisture content that has been tested is 30%.

The recovery of the energy from the system has not been determined for the prototype. It is expected that for direct use of hot gases, the energy recovery will be comparable to other similar systems.

As with other systems at the same stage of development, many factors such as capital and operating costs cannot be determined accurately. The manufacturer claims that a 60 million Btu/hr. unit will cost in the range of $470,000 excluding erection.

In addition to the one system operating at Engen, B.C., a unit has been sold in New Zealand where it will be used to heat clean air in a heat exchanger for use in a flash dryer. The sale of two further units in B.C. is being negotiated at the present time.

The manufacturer is very interested in the application of the burner to lime kilns. This possibility is being discussed with several pulp and paper companies.

(4) Envirometrix Systems

Envirometrix Inc. of Seattle, Washington, manufacture a multiple-chamber incinerator suitable for wood residues. Sales of the system are handled by Thermal Efficiency Inc., a subsidiary of Washington Natural Gas. To date, there are four systems in operation on wood wastes.

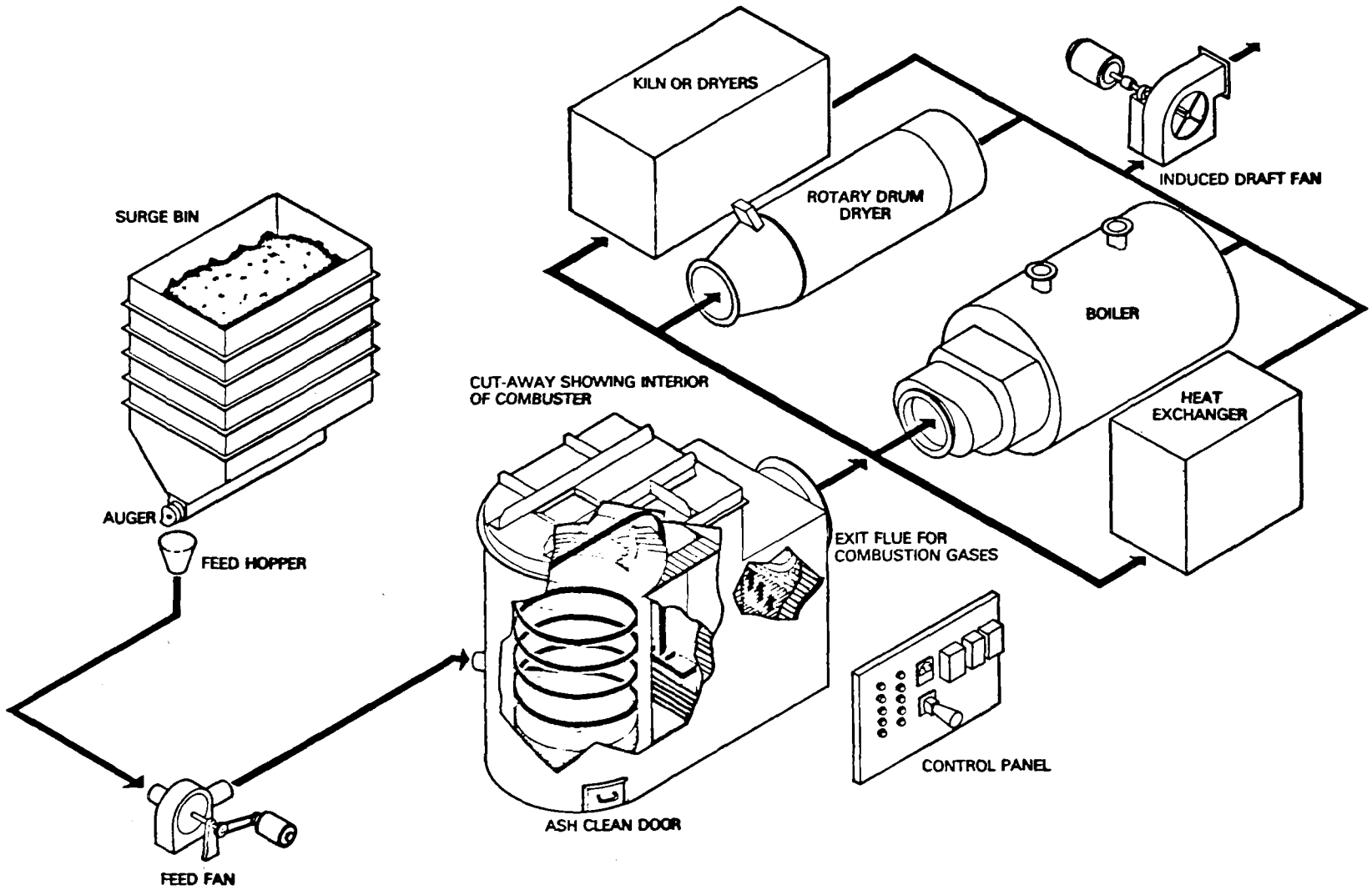

Envirometrix

Multiple Chamber Incinerator

Figure 10

Systems are available with energy outputs from 1.0 million Btu/hr. to more than 100 million Btu/hr.

Primary combustion occurs in a suspended vortex. The system is capable of burning wood residues of less than 50% moisture (wet basis) and sized to minus 3/4 inch.

Particulate emissions are controlled by the multiple-chamber concept and all gases pass through a bed of filter aggregate integral with the combustor (see Figure 10). Emission tests performed on the unit have shown particulate emissions of less than 0.08 gr/sdcf at 12% CO_2 when burning wood residues.

The whole system is refractory lined to reduce heat losses. The energy is available in the form of hot clean gases suitable for a boiler, dry kiln or other use.

The company to date has not provided information on its installations.

(5) Anga and Värme A.B.

This is a Swedish company which has been producing wood and bark-fired furnaces for 20 years. More than 2000 furnances have been built during that time. Most systems have been equipped with a boiler to produce steam.

Individual units are available in sizes from 4 to 40 million Btu/hr. The fuel must be hogged to minus 4 inches, but moisture contents of 65% can be accepted.

The system is composed of primary and secondary chambers (Figure 11). Fuel is augered into the primary chamber through the bottom of the fuel bed. For high-moisture-content fuels, the refractory grate is conical shaped; for low-moisture-content fuels, the refractory floor is flat. Overfire and underfire are added in the primary chamber.

LIST OF ITEMS

1 Hydraulic powerstation
2 Hydraulic cylinders
3 Hydraulic scraper system
4 Screw conveyor outfeed
5 Main feed screw conveyor
6 Stoker bin
7 Stoker screw conveyor
8 Predrying zone for fuel
9 Main furnace
10 Primary air fan
11 Secondary air fan
12 Boiler
13 Fallout zone for unburned particles
14 Dust separation
15 Reintroduction of dust
16 Dust outfeed system
17 Main fan for fumes
18 Smoke stack
19 Outfeed system for ash and cinder
20 Container

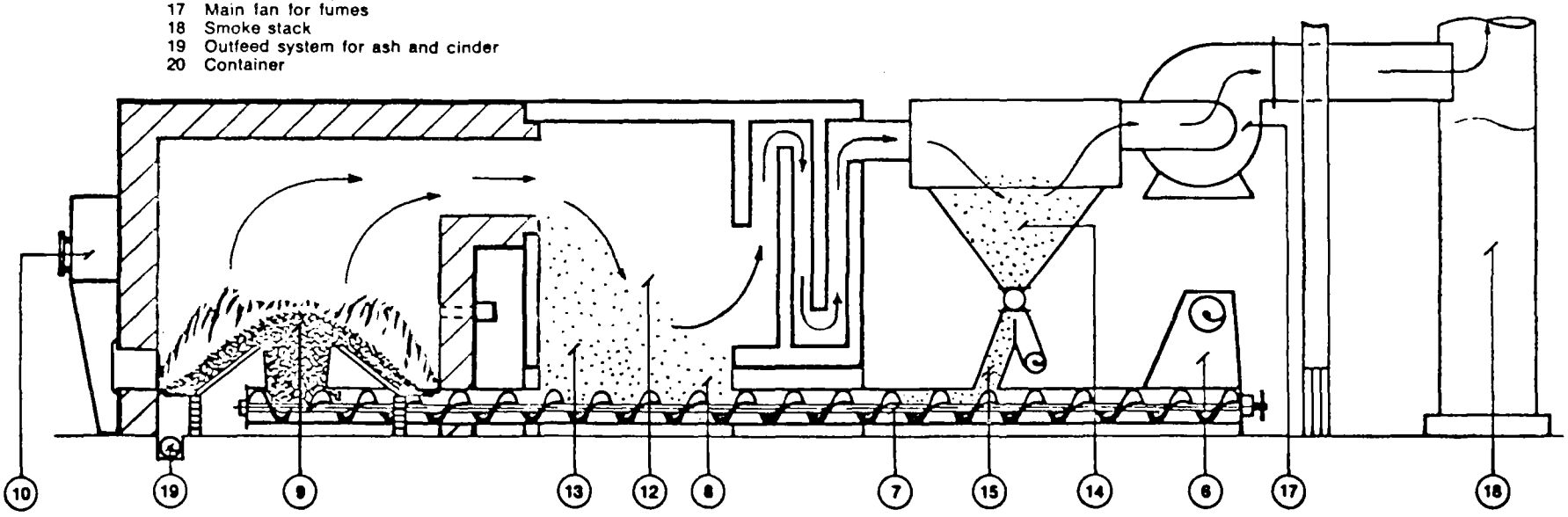

Ånga & Värme AB

Multiple Chamber Incinerator

Figure 11

In the secondary chamber, the velocity of the gases is dropped drastically and many of the large particles drop out and are picked up by the incoming fuel. The incoming fuel is also exposed to the hot gases and some drying does take place. This secondary chamber can be water-wall cooled and form part of the steam boiler.

Ash removal from the system is semi-automatic. The fuel feed to the fire must be stopped; the grates then manually raked to bring the ash to one corner of the furnace, where it drops to a screw conveyor and is carried out of the furnace. The fuel feed is then started again. This procedure must be carried out once per week. It is important to note that the fire is not extinguished during this procedure. Stopping and starting the fire and the resultant thermal shocks can cause refractory failure.

The system is equipped with multiple cyclones to control the particulate emissions. Emissions from Swedish systems burning bark only have been measured at 0.20 gr/sdcf at 12% CO_2. In Sweden, the manufacturer guarantees 0.26 gr/sdcf at 12% which is the Swedish requirement.

For a 28 million Btu/hr. system, the installed electric load is about 170 hp from the fuel bin to the burner. The costs for such a system in Canada with a firetube boiler, complete with fuel storage and preparation, but not including a stack or building for the system, have been estimated at $400,000. For the same system, but with a watertube boiler, the cost would probably be $500,000. The furnaces would be built in Canada and a North American designed boiler would be used. No systems are in operation in Canada to date.

(6) Berg and Starck A.B.

The company is another Swedish firm who manufacture wood-residue furnaces and who are now expanding into the North American

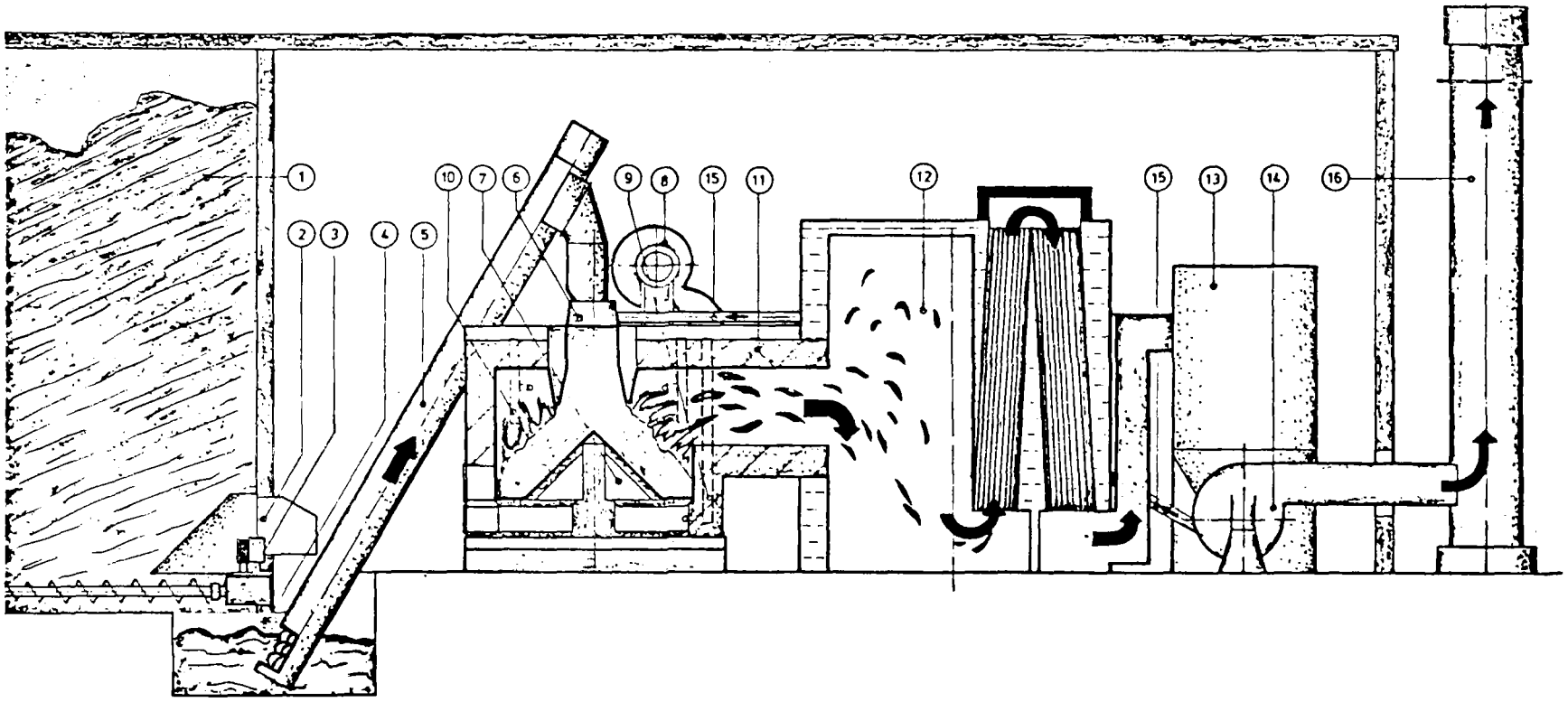

1 Silo
2 Pendulum automation
3 Pendulum screw
4 Level control
5 Up-feeding screw
6 Level control
7 Grill system
8 Fan
9 Primary air
10 Secondary air
11 Tertiary air
12 Convection part
13 Flue gas filtration
14 Flue gas fan
15 Dust recovery
16 Chimney

Berg & Stark AB

Multiple Chamber Incinerator

Figure 12

market. The first of the more than 200 plants was installed in 1957. Most systems are equipped with steam production equipment.

The plants in production range in size from less than 1 million Btu/hr. to 60 million Btu/hr. Designs are available for systems up to 100 million Btu/hr. The fuel must be hogged so that it can be transported by an auger. Moisture content of up to 60% can be burned.

The furnace is made up of primary and secondary chambers (Figure 12). Fuel is fed down onto a cone-shaped grate. Underfire and overfire air is supplied in this primary chamber. Tertiary air is supplied between the primary and secondary chamber. The primary chamber is refractory lined while the secondary chamber has water walls.

Ash removal from the system is manual, involving four hours once per week. Other maintenance requires about one hour per day.

The system is equipped with multiple cyclones for particulate control. The ash from the collectors is reinjected into the incoming fuel on most systems. Particulate emissions from the system are in the order of 0.15 gr/sdcf at 12% CO_2 while burning bark. The manufacturer claims that when 40% wood and 60% bark are burned the emissions are less than 0.10 gr/sdcf at 12% CO_2.

No costs are available for a Canadian installation of the system at the present time.

(7) Konus-Kessel

This West German manufacturer has specialized in heat-transfer systems using thermal oil. The first systems were installed in Europe in the mid-1960s. The units have found wide acceptance in

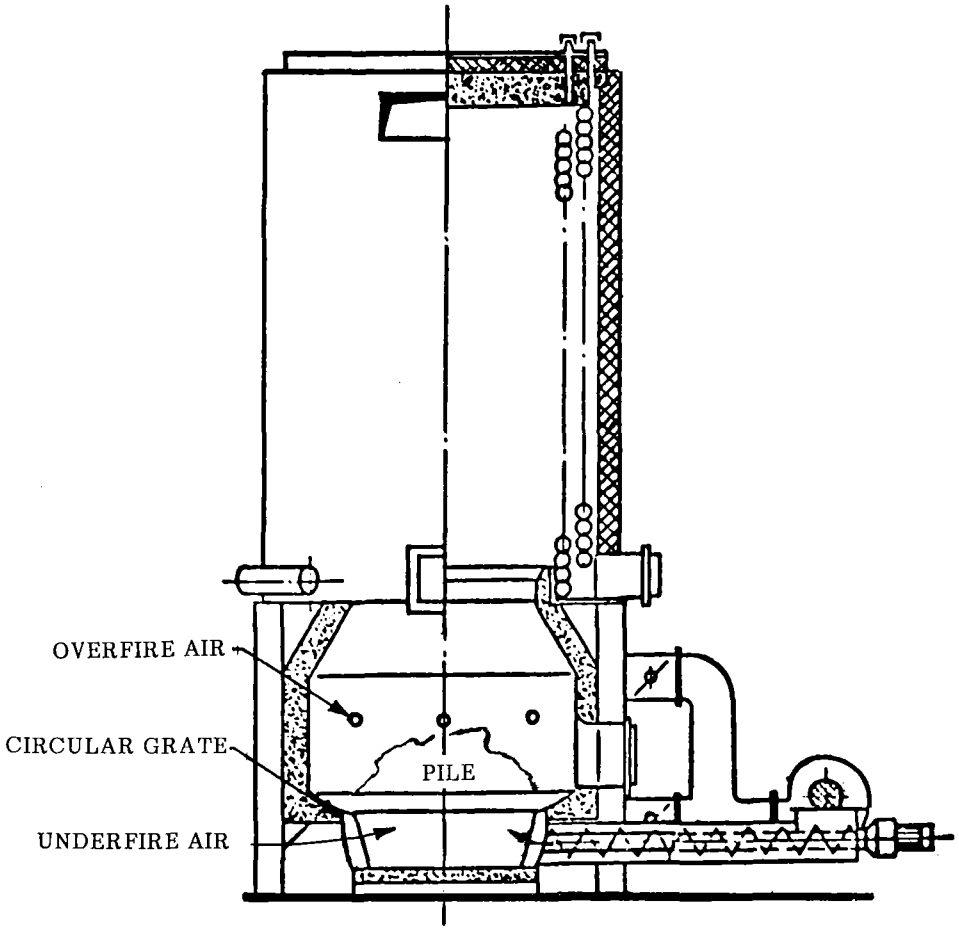

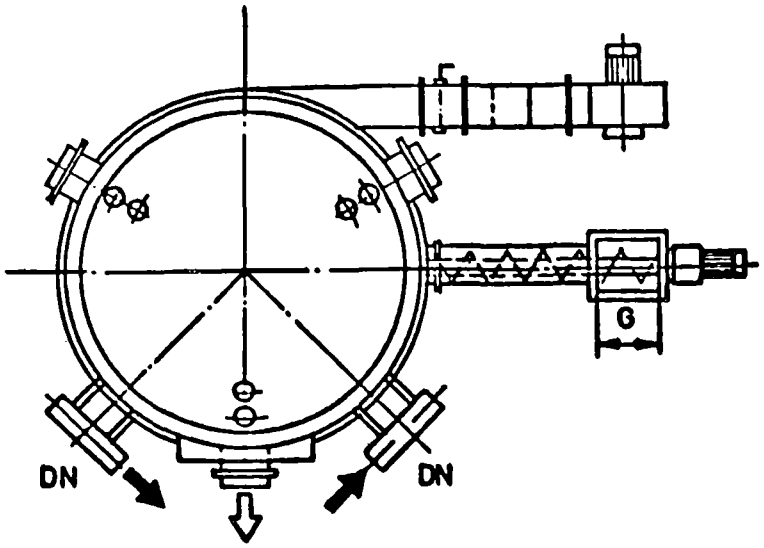

Konus – Kessel

Multiple Chamber Incinerator

Figure 13

many industries, including forest products, textiles, metal processing, chemical, plastics and the food industry. Most of these units use fuel oil for firing the burners.

In the mid-1970s, a solid waste burner was developed. To date 11 of these systems have been sold, including one at the Waferboard Corporation plant at Timmins, Ontario. The solid waste burners have been installed in sizes from 3 million Btu/hr. to 24 million Btu/hr.

The solid waste burner (Figure 13) is basically a multiple-chamber combustor. Fuel is fed under the pile by a screw. For wet fuel, water or oil-cooled grates and some underfire air are used, but for dry fuel no underfire air is used and the grates are solid. Overfire air is added above the pile and the combustion is completed in the second chamber. The secondary chamber is lined with oil-filled tubes for heat transfer.

The ash-removal system is similar to the Swedish units in that the system must be shut down for one-half hour and the ash raked to the corners of the system, where it is carried out of the combustion zone by a screw conveyor.

The combustion process is fully automated. An auxiliary fuel burner is included for ignition of the solid fuel. Auxiliary burners can be supplied to provide continuous output with intermittent solid fuel. A special sanderdust burner is also available. This burner injects the sanderdust directly into the secondary chamber.

Other optional equipment includes a pre-drying chamber for wet hog fuel and special grates for material with very high ash content.

The combustion units are prefabricated at the factory. Very little refractory is used. The manufacturer claims that maintenance costs are low because of the absence of refractory.

Overall thermal efficiencies of about 90% are claimed with the three-pass heat-recovery system. These values apply only when fossil fuels are fired.

The two systems to be installed at Waferboard's Timmins plant are rated at 24 million Btu/hour each. They will be burning hog fuel, bark and sanderdust. The cost for the equipment including some equipment to convert direct fired burners to oil heat will be about $1 million. The installed cost will probably reach $1.8 million including fuel handling and storage.

D. Single-Chamber Combustors

1. Enertherm Inc.
2. Olivine Corporation
3. Lochhead-Haggerty Engineering
4. Irvington-Moore

(1) Enertherm Inc.

The company is an engineering and research company located in Mount Vernon, Washington. They have developed a pile burner which is suitable for wood residues and shredded municipal refuse.

The combustion unit is a simple refractory-lined cylinder employing pile burning. Air is supplied through a series of underfire grates and some overfire air is supplied tangentially to increase the turbulence above the bed. On most systems the fuel is fed to the pile by means of a chute, although systems have been designed which employ a screw feeder onto the bed (see Figure 14). The basic burner is similar to a beehive burner, but the walls are refractory lined and closer to the fire. This allows higher operating temperatures and, thus, more complete combustion.

Enertherm units are constructed with an outer steel shell and a high-temperature fire-brick wall inside this steel shell.

MULTIPLE CHAMBER COMBUSTORS

	Basic Environmental	Consumat	Lamb Wet Cell	Envirometrix	Anga & Värme	Berg & Starck	Konus-Kessel
[1]Stage of development	a	a	a	a	a	a	a
Emissions less than 0.100 gr/sdcf?	Yes	?	Yes	Yes	No	No	?
Is system fully automated	Yes	Yes	Yes	Yes	Yes	Yes	Yes
Maximum moisture content, % mc (wet)	43	>65	65	50	65	65	60
Maximum fuel size	4 in	3 in	3 in	3/4 in	4 in	4 in	4 in
Sizes available x 10^6 Btu/hour							
0-10	X	X		X	X	X	X
10-20	X	X		X	X	X	X
20-30	X	X	X	X	X	X	X
> 30	X	X	X	X	X	X	
[2]Costs, $\$10^3$ /10^6 Btu							
In size 0-10							
10-20		17.6*					
20-30					14		
> 30	11		10*				
Turndown ratio	4		5				
Form of energy	Steam	Steam	Hot gases	Hot gases	Steam	Steam	Hot oil
Is auxiliary fuel necessary?	No	Yes	No	No	No	No	No

[1]a - Proven
b - Prototype
c - Pilot
d - Experimental

[2]*Indicates capital costs only, not including installation

The incinerators are available with a flat floor or a sloping floor for easy ash cleanout.

Seven units have been installed in B.C. and Washington, the oldest of which has been in operation since 1973. These units generally have replaced teepee burners at shingle mills.

Two units are presently under construction at Prudhoe Bay, Alaska for disposal of shredded municipal wastes. These two systems use a ram feed and knife gate arrangement for the fuel feed. The floors of the units are sloped and automatic ash removal is used. The controls for the two solid waste burners are completely automatic. The hot gases are used in an air-to-liquid heat exchanger and are then passed through a baghouse prior to discharge.

One system installed at Concrete, Washington has an air-to-air exchanger installed in the burner exhaust. At present about 10% of the available energy is ducted to a dry kiln. The kiln is used to reduce the free moisture present in manufactured shakes and shingles. The drying rate of the wood is not strictly controlled, and there are no means for controlling the wet bulb or dry bulb temperatures. The hot air is ducted to the kiln only during the two shifts the burner is operated. The heat exchanger system and kiln building paid for themselves in less than one year by reducing freight charges for the lighter dry shakes.

The systems require only electrical input. For a burner which disposes of 4 units/hour (64 million Btu/hr) the connected electrical load is only 20 h.p. The addition of energy recovery would increase this power load.

The systems which use the chute feed can accept all wood residues with the possible exception of sander dust. For systems which use a ram or screw feeder the fuel should be hogged to minus 3 inches. All moisture contents that will support combustion

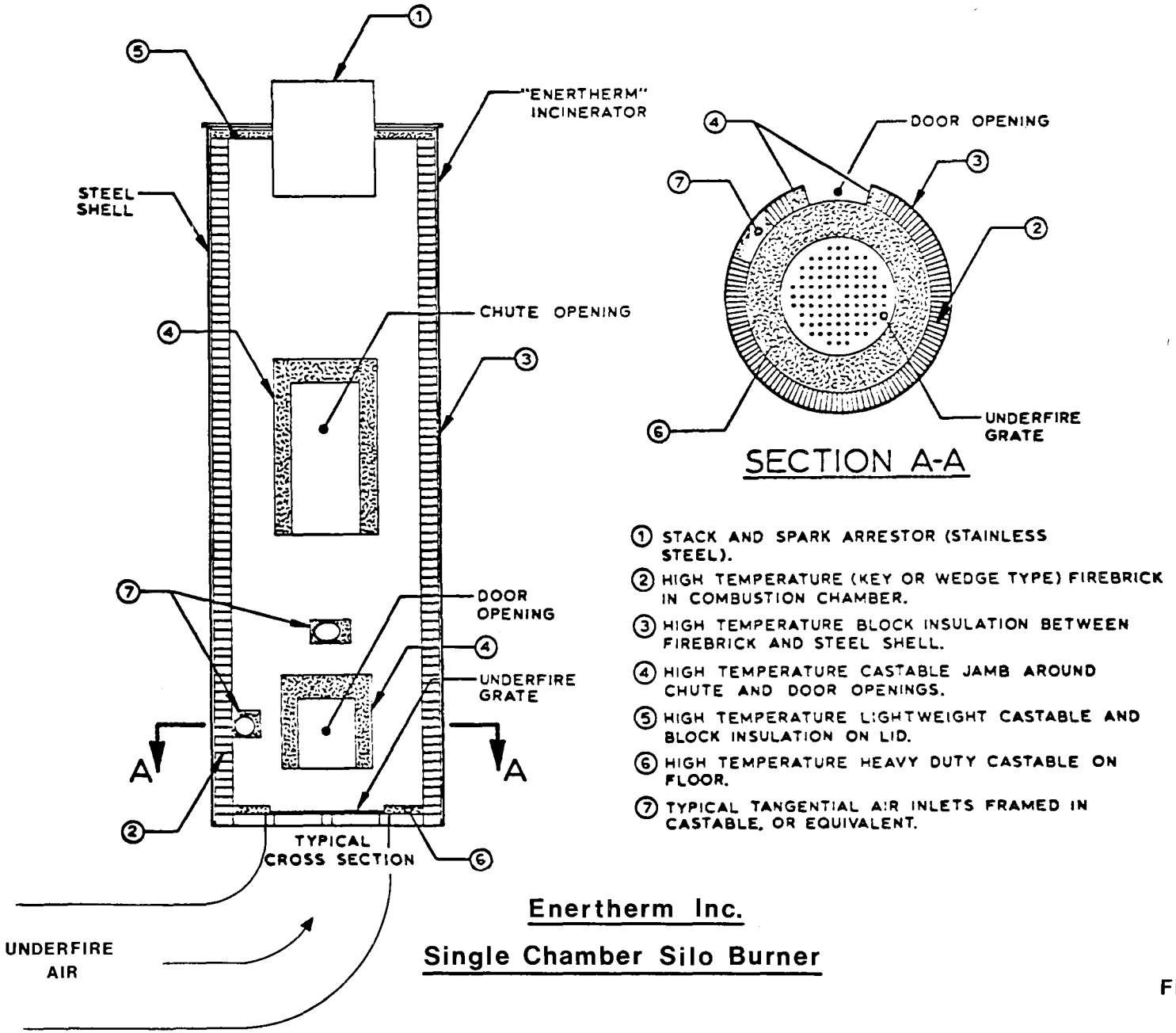

Enertherm Inc.

Single Chamber Silo Burner

Figure 14

can be burned (usually 60 to 65% wet basis maximum).

The turndown ratio is about four to one. This is limited by the production of smoke and the relatively crude control system on most burners. Start-up of the system is typical of that for a tee-pee burner. A small pile is formed, then a fossil fuel is used to ignite the pile. A burner that operates two shifts per day will still be hot enough at the start of the following day to sustain combustion.

The emissions from the units are acceptable to most control authorities at the present time. In general, the units burn smoke-free and are an improvement over most conical incinerators. No particulate-emission data are available due to the problems of sampling the units. It is expected that emissions are greater than 0.1 gr/sdcf. Enertherm and other manufacturers are investigating collection devices for the units, since more rigorous control requirements are expected in many areas in 1980.

The simple systems for wood residues require no more supervision than a tee-pee burner; that is, only occasional supervision. The more sophisticated system being installed in Alaska will employ three people per shift to supervise the unloading, shredding and combustion of the refuse.

The capital costs for the Enertherm units vary greatly depending on the application. For a simple burner with no automatic control system, capable of disposing of four units/hour, the cost installed in 1976 was $50,000. For the system in Alaska with two units, one for one unit/hour and one for two units/hour, with all shredding and processing equipment and the heat-recovery system, the complete package cost is $1.2 million installed.

Maintenance costs for the burner alone will be similar to conventional teepee burners. Ash cleanout will be required once every one or two weeks. The refractory has stood up very well in all units. Only some of the bottom bricks, which

are subjected to pounding by the wood from the chute, have required replacement in units that have operated for five years.

The system with heat recovery in operation at Concrete, Washington, utilizes only 10% of the available hot gases. The system at Prudhoe Bay, Alaska is expected to have a 60% thermal recovery.

The system is adequately documented to be classed as proven technology for incineration of wood waste and in the prototype stage for energy recovery.

An almost identical system has been sold in B.C. by Enerco Ltd. Assembly and construction of this unit has been handled by Fincraft Fabricators Ltd.

(2) Olivine Corporation

The corporation manufactures a cyclonic single-chamber incinerator based on principles similar to those used in the Enertherm unit. Thirty-five of these systems have been sold in B.C., Washington and Alaska.

The major difference between the two units is the method of construction. Olivine employ cast refractory slabs to make the silo burner. They do not use any exterior metal cladding to protect the refractory. The main advantage is that the unit can be assembled very quickly at a low capital cost.

One unit being installed at Hoquiam, Washington, will have the capability of utilizing some of the energy. The hot gases from the burner will pass through a container of gravel, which will scrub particulate from the gas and act as an energy sink. The gases will either be used as they come from the scrubber or two scrubbers will be used in parallel. When one scrubber is heated, ambient air will be drawn through the other, being heated, and then used. The system is a prototype and no operating

experience is available.

The Olivine burners are considerably less costly than the Enertherm units. A system to dispose of four units of waste/hour will cost $25,000 installed. The largest burner manufactured measures 40 feet diameter by 60 feet high. It is capable of burning about 30 units per hour. The cost for this system installed but excluding the blowers was $130,000 (U.S. 1977).

There have been copies of both the Enertherm and the Olivine units in B.C. Salton Construction Ltd. build a system very similar to the Olivine unit. Some have failed quickly, thereby leading to a widely held belief that all such units are unsound.

There appears to be considerable promise for these units in specific applications where waste must be disposed of and some energy recovery is needed. There also appears to be a need for a critical evaluation of the durability of construction.

Particulate emissions from the unit are likely to be greater than 0.100 gr/sdcf at 12% CO_2, but at the present time the systems are acceptable to the control authorities.

(3) Lochhead-Haggerty Engineering & Manufacturing Co. Ltd.

The company is developing a single-chamber combustor for wood residues, which is suitable for direct firing a dry kiln. One unit has been manufactured and is being tested at a shingle mill on Vancouver Island. This system has had about 600 hours of operation.

The combustor is essentially a small travelling-grate furnace fed at one end by a screw conveyor with ash dropping through the grate. Primary combustion air passes upward through a thin bed of fuel and secondary air is provided as required (see Figure 15).

The problems with the first system have involved mainly the fuel feed to the burner.

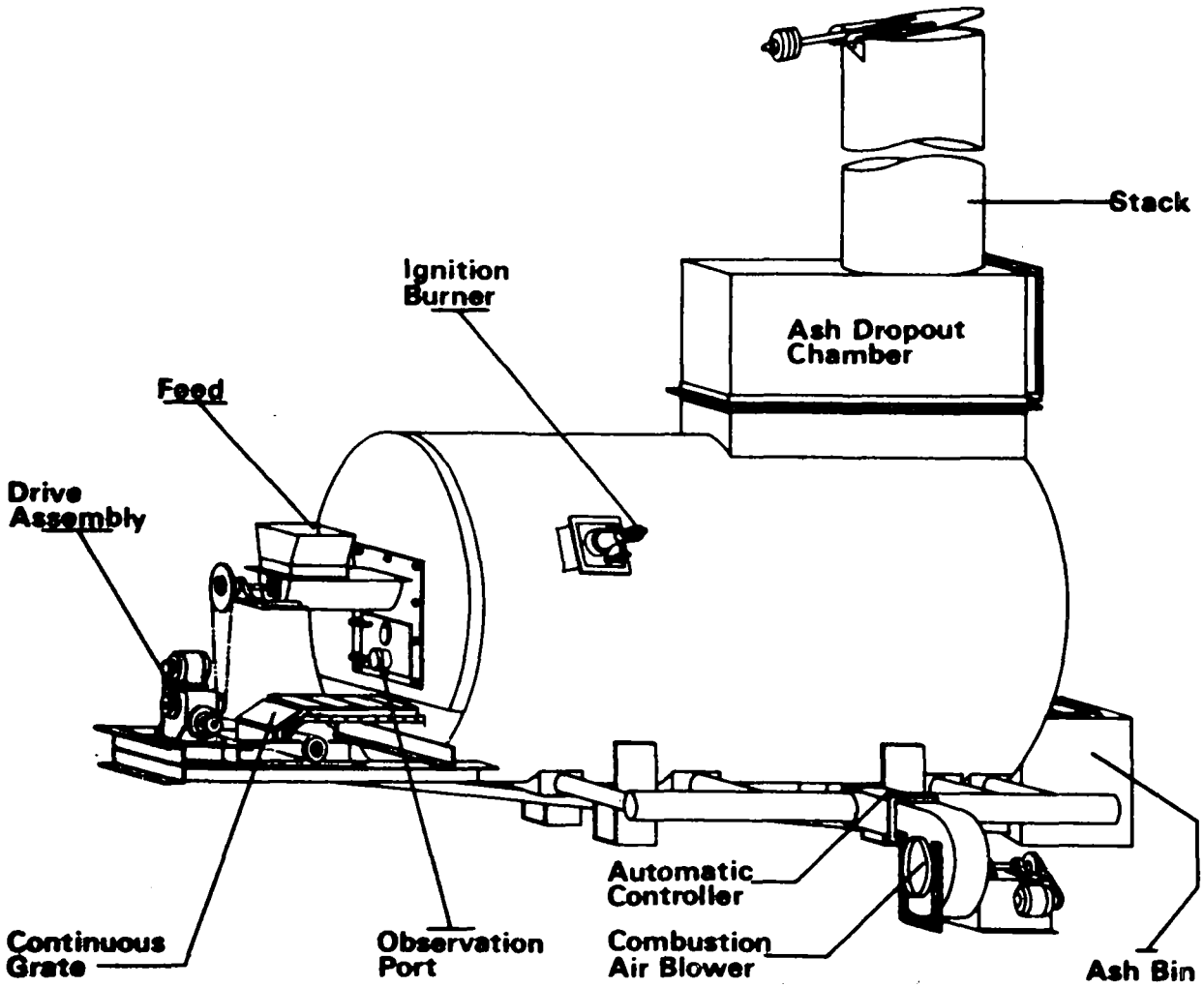

Lochhead / Haggerty

Single Chamber Combustion

Figure 15

The system at the present time is not automatically controlled. A control system is being constructed for the unit and it is expected to be installed in 1978. The control system has been designed to be rather simple. The manufacturer's aim in building the burner has been to produce a simple and inexpensive system.

The one system in operation has a wet scrubber added to clean the exhaust gases. One emissions test has been completed by the manufacturer and particulate emissions were in the order of 0.06 gr/sdcf at 12% CO_2. The fuel for this test was dry planer shavings. Further emission tests are planned in 1978.

The burner is capable of accepting fuels with moisture contents of up to 60% (wet basis). The fuel does not have to be hogged for the system. Many of the problems encountered to date with the system would not have occurred if the moisture content had been less than 50% and the fuel had been hogged.

The recovery of energy from the combustion cell is not high. The use of the wet scrubber drops the temperature of the exhaust gases from 1500°F to 500°F or less. The manufacturer has not performed energy or mass balances on the system. It is estimated that about 30% of the energy available from the wood is present in the gas stream after the scrubber.

Burners are available in capacities of 5, 10, 15, 20 and 30 million Btu/hour heat input. These burner capacities are for fuels with less than 20% moisture content. With wetter fuel, the capacity drops.

The energy from the system is available in the form of a hot clean gas. For dry-kiln applications there is the extra advantage that some moisture is picked up through the scrubber and it should improve the control of the wet-bulb temperature in a dry kiln.

The capital costs for the system have not been definitely established at this time. It is expected that the 5 million Btu/hour system with the scrubber system will cost about $50,000. For the 30 million Btu/hour system including scrubber, the cost is expected to be $110,000. The costs are for the basic unit only and do not include fuel storage, conveying the fuel to the burner, installation, or taxes. The costs in the matrix have been corrected to the energy output.

The unit is in early stages of prototype operation.

(4) Irvington-Moore

This division of U.S. Natural Resources Inc. has developed a single-chamber combustor that features an underfeed system. The system has been designed specifically for direct-fired dry kilns and veneer-dryer systems.

The system is automated and the combustion of the wood is controlled by the heat demand of the kiln. The burner has been designed with a turn down sufficient for dry-kiln applications.

The manufacturer states that the system will meet all local and federal standards in the United States. The underfeed concept and fly-ash collectors will produce little or no ash carry-over.

The system is capable of burning hogged fuel of up to 55% moisture content (wet basis). Auxiliary fuel burners can be included in the system, but they are not necessary for start-up or continued operation.

No mass or energy balances are available, but since the products of combustion are utilized directly it is expected that the overall efficiency will be high. The hot gases produced are capable of being used directly in a dry kiln. The company is in the process of developing a combination burner/boiler that can be used in

conjunction with a steam kiln.

Typical installed costs for a burner between 5 and 10 million Btu/hr. firing one kiln would be $250,000 to $300,000 in the United States. For a 30 million Btu/hr. unit firing three kilns, the costs would be $550,000 to $700,000. Only one installation has been made to date. It is located at the Bass Lumber Co. at Kennard, Texas. This unit has a capacity of 15 million Btu/hr.

E. Packaged Power Boilers

1. Wellons Inc.
2. Ray Burner Company
3. Gebr Weiss Boiler Co.
4. Babcock & Wilcox Ltd.

(1) Wellons Inc.

The company has been manufacturing wood-residue power boilers for more than 15 years. In that time, more than 60 units have been installed and several units are under construction at the present time. None is installed in B.C.

Steam generation capacities from 3,000 to 60,000 lb./hour are available. Multiple-package systems are utilized for systems requiring more than 60,000 lb./hour of steam.

The control system is fully automated. In the United States, many high-pressure boiler systems are operating with no full-time attendant. This type of operation would not be possible in B.C. where a steam engineer would be required.

Combustion takes place in a pile located in a refractory-lined chamber. The pile is supported by water-cooled grates. Particulate control is by a large drop-out chamber in the boiler and by multiple cyclones.

SINGLE-CHAMBER COMBUSTORS

	Enertherm	Olivine	Lochhead Haggerty	Irvington Moore
[1]Stage of development	b	b	b	a
Emissions less than 0.100 gr/sdcf?	?	?	Yes	Yes
Is system fully automated?	No	No	No	Yes
Maximum moisture content, % mc (wet)	65	65	60	55
Maximum fuel size	1 ft	1 ft	1 ft	3 in
Sizes available x 10^6 Btu/hour				
0-10			X	X
10-20	X	X	X	X
20-30	X	X	X	X
> 30	X	X	X	X
Costs, $\$10^3$ /10^6 Btu				
In size 0-10			33	30
10-20				
20-30				23
> 30	0.8	0.4	12	
Turndown ratio	4	4		
Form of energy	-------- hot gases ---------			
Is auxiliary fuel necessary?	No	No	No	No

[1]a - Proven
b - Prototype
c - Pilot
d - Experimental

The burners can accept fuels up to 50% moisture (wet basis) and sized to minus 3 inches. No other fuel treatment is required.

The burner system utilizes a preheater for the air for combustion. Overall thermal efficiency is expected to be high, but slightly lower than for a water-wall system because there will be less radiant heat transfer with the separate burner cell and boiler. The system has a turndown ratio of five to one. Nothing is known about response to load demands, but it probably is poor because of the pile-burning principle.

Wellons Inc. have not installed any equipment in Canada, so installation costs for B.C. are not known. A 20,000 lb/hour low-pressure boiler would cost about $210,000 for the equipment, $10,000 for freight and $155,000 for installation. A high-pressure boiler of the same size would be $270,000 for the equipment, $8,000 for freight and $155,000 for installation. A de-aerator would be an additional $15,000 if it was required.

Wellons have also used the same combustion cell for direct-fired veneer dryers. The only change to the system is that the fuel is fed under the fire and the multiple cyclones are eliminated. The hot gases are then blended with recycled dryer air. One system is now in operation and another system in progress.

The units are considered to represent proven technology.

Particulate emissions from the system are typically 0.15 gr/sdcf at 12% CO_2. One operator in Oregon is currently modifying his system and is confident that emissions will be less than 0.10 gr/sdcf at 12% CO_2.

Maintenance requirements for one system which was installed in 1964 are currently two to three hours per day.

(2) Ray Burner Company

The company produces a packaged boiler system for wood residues. The combustion part of the system is basically a suspension burner firing over a grate (see Figure 16). The system is fully automatic and in some states requires no operator.

A cyclone may be used to collect the particulate emissions from the boiler. The particles that are collected are reintroduced into the combustion chamber. The particulate emissions from the unit are claimed to be less than 0.15 gr/sdcf at 12% CO_2.

The burner can only accept dry sized fuel. The moisture content of the fuel must be less than 15% and it must be uniform. The individual particles must be no larger than 1/4-inch square by 1-inch long. Supplementary fuel is required for about one hour prior to wood being burned. Bark is not favored because of high ash content.

The boiler efficiency is approximately 80% when operated on wood waste. The turndown of the system is only two to one. If the process requires greater turndown, two or more boilers must be used in parallel. The systems are available in sizes from 3,450 lb/hour of steam to 17,250 lb/hour.

The costs for the system range up to $160,000 for a 500 h.p.* high-pressure system. This includes a supplementary gas burner and all equipment from the boiler downstream. It does not include the delivery of fuel to the boiler, nor does it include the installation. There are a dozen systems in operation in North America.

A Ray boiler was installed in 1976 at Bohemia Lumber Inc. in Eugene, Oregon, to replace a gas-fired package boiler. The

---

*500 hp = 17,250 lb. steam/hr.

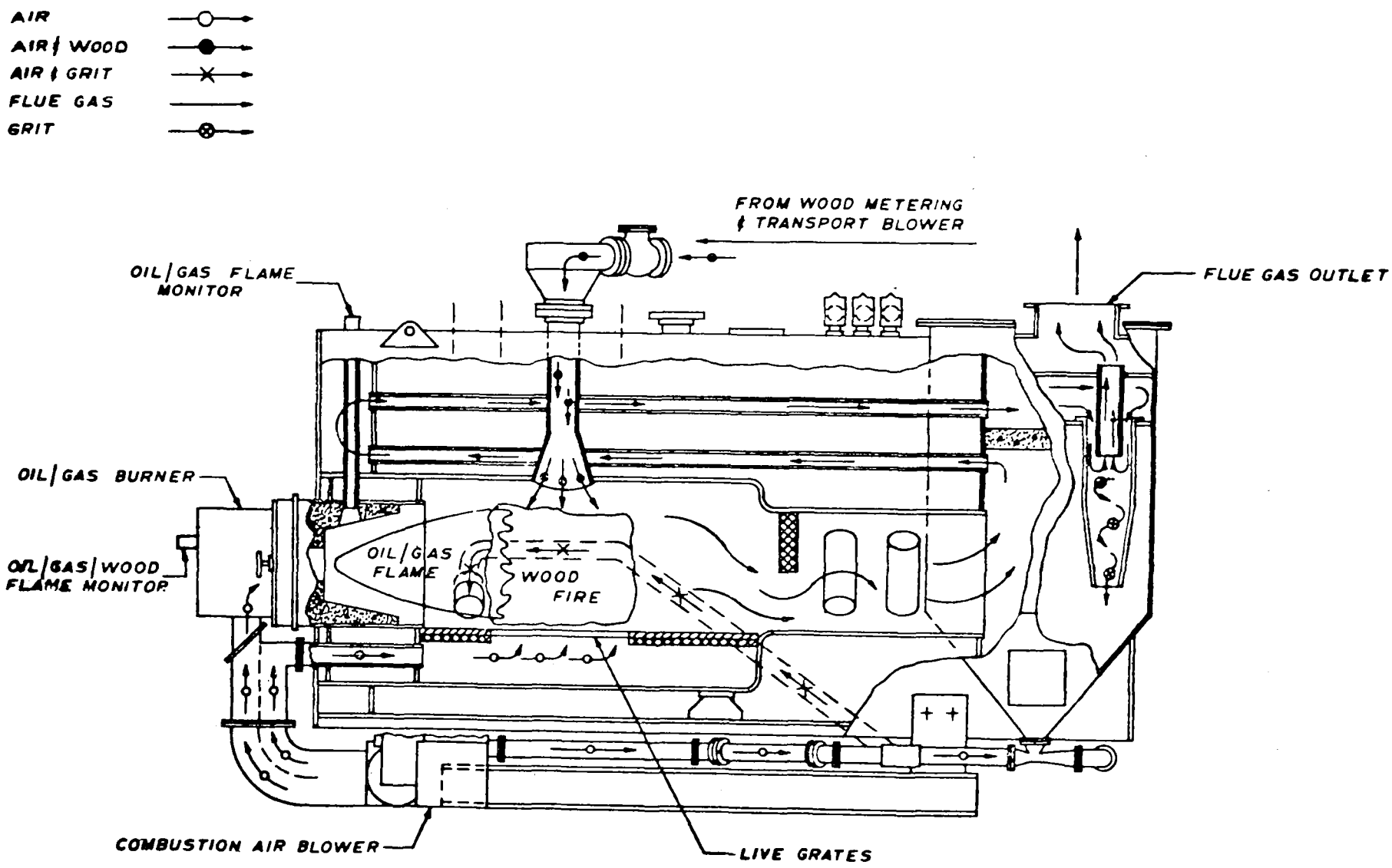

Ray Burner Co.

Package Power Burner

Figure 16

operation of this unit is of interest:

- Cost of package with controls, but not including installation, was $140,000:
- Fuel is sander dust and pulverized dry hog fuel, 5% m.c., 1/16-inch size;
- Gas pilot for start-up only, but no pilot thereafter;
- Turndown ratio three to one;
- Boiler is three-pass, fire-tube with a small grate to burn larger particles;
- Boiler rating is 10,500 lb. per hr. at 100 psig;
- Operation is fully automatic;
- Payout estimated at one year.

The above data demonstrate that performance is site specific. The Ray boiler is considered proven technology.

(3) Gebr Weiss Boiler Co.

The company has been manufacturing wood-fired power boilers for more than 50 years. In North America several systems have been operating for as long as five years. The boilers are available in high- and low-pressure steam and hot-water models. Many combustion chambers are available for the boilers, including step grates, rotary grates, suspension firing and others.

The package boilers are available in sizes from 50 h.p. to 350 h.p. (1,750 to 12,250 lb/hour of steam) and larger systems up to 60,000 lb/hour of steam can be built.

The systems are capable of burning residues from sander dust to end cuts and yard clean-up. Moisture contents up to 60% (wet basis) can be handled. The boiler systems have a combustion efficiency of about 70%.

The Weiss Boiler Co. and their representatives in North America attempt to custom design a boiler system for each application. The capital investment required for each system can vary widely, depending on the wood residues to be combusted and the type of steam or hot water produced.

(4) Babcock and Wilcox Ltd.

The company manufactures a shop-assembled, water-tube boiler called the Tower Pak boiler. This boiler is available in sizes from 20,000 to 60,000 lb/hour. Babcock and Wilcox have indicated that the smaller sizes of 20,000 and 30,000 lb/hour are not cost effective when compared with other packaged power boilers. There are several larger units in operation including one at a Weldwood plant in Thunder Bay, Ontario.

F. Gasification

1. Westwood Polygas Ltd.
2. B.C. Research
3. Mellenger Gasodyne
4. Forest Fuels Inc.
5. Andco-Torrax
6. Union Carbide
7. Bio-Solar Research and Development Corp. (Woodex)
8. Canadian Industries Limited
9. University of California at Davis
10. Eugene Water and Electric Board

(1) Westwood Polygas Ltd.

The gasification system designed and developed by Moore Canada Ltd. is now owned by Westwood Polygas. One system has been installed at Ainsworth Lumber Ltd. at Chasm, B.C. This system is composed of two reactors, each capable of handling 2.5 tons of wood residue per hour (40 million Btu/hr. input). A number

PACKAGED POWER BOILERS

	Wellons	Ray Burner	Weiss Boiler	Babcock & Wilcox
[1]Stage of development	a	a	a	a
Emissions less than 0.100 gr/sdcf?	No	No	?	?
Is system fully automated?	Yes	Yes	Yes	Yes
Maximum moisture content, % mc (wet)	50	15	60	60
Maximum fuel size	3 in	¼ in	1 ft	3 in
Sizes available x 10^6 Btu/hour				
0-10	X	X	X	
10-20	X	X	X	
20-30	X			X
> 30	X			X
[2]Costs, $\$10^3$ /10^6 Btu				
In size 0-10				
10-20	18.7	9.2*		
20-30				
> 30				
Turndown ratio	5	2		
Form of energy	---------- steam ----------			
Is auxiliary fuel necessary?	No	No	No	No

[1]a - Proven
b - Prototype
c - Pilot
d - Experimental

[2]*Indicates capital costs only, not including installation

of problems have occurred during start-up of the system and to date only about 300 hours of operating time have been recorded. The problems have concerned material handling and have mainly involved ash removal and fuel flow through the reactor.

The process is stated to embody plug flow of wood waste downward through a stationary reactor. The hog-gasification zone is well down the reactor and evolved gases pass upward through incoming fuel. The unit is designed to remove ash continuously at the bottom of the reactor via a rotating grate.

The units at Ainsworth Lumber Ltd. are essentially prototype systems and so no reliable estimate of the amount of attention required by an operator is available.

The gas produced by the system is treated by passing it through a wet cyclone and a wet scrubber (see Figure 17). The tars and condensate from the wet cyclone are incinerated in a flare. Particulate emissions from this flare on the pilot unit built by Moore Canada Ltd. were measured at 0.010 gr/scf. Some of the gas produced is used in this flare and some of the heat from this flare is used to preheat the combustion air for the reactors. The remainder of the gas can be used in a mill process, such as a dry kiln or boiler. The particulate emissions from this second burner on the pilot unit were measured at 0.004 gr/scf.

The gasification system is capable of accepting fuels of moisture contents up to 50% (wet basis). The feed system can accept pieces up to 8 inches long. The lack of a fuel sizing requirement may be part of the reason for the problem of fuel flow through the reactor.

The pilot unit operated by Moore Canada Ltd. was able to recover about 50% of energy available from the wood and do useful work with it. A further 30% of the energy was used to flare the

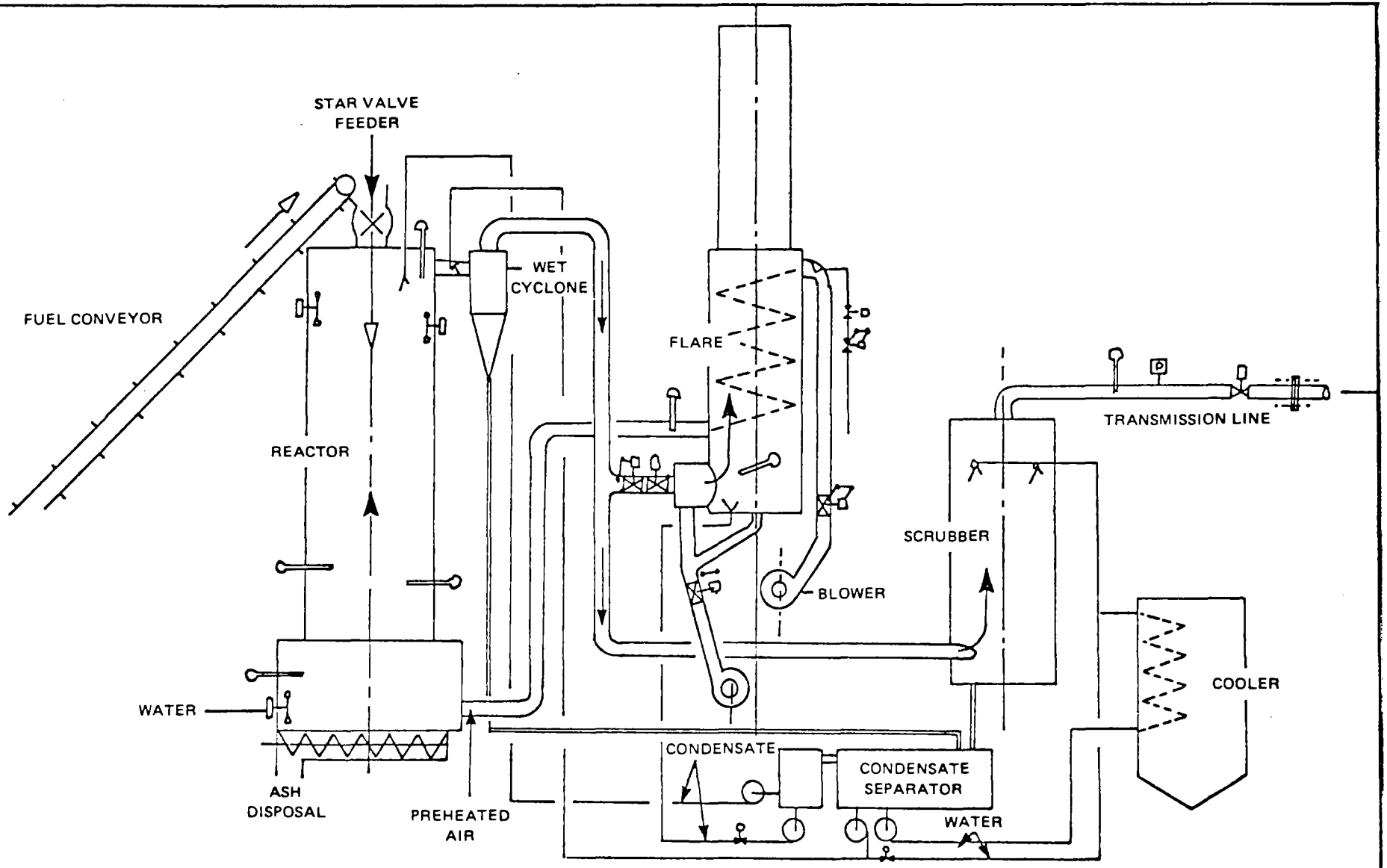

Westwood Polygas Ltd.

Wood Gasification System

Figure 17

tars and condensate. The remaining 20% was lost in heat transfer and the tars. The full-scale reactors, therefore, have a useful output of 20 million Btu/hr. each.

No cost estimates are available for the system. At such time as the two prototype reactors are functioning satisfactorily, cost estimates will be made. Westwood Polygas would redesign many of the system components for a second system, based on the information already obtained from the prototype.

The gasification system is expected to have a turndown ratio of four to one. Control of the gas output is by limiting the air introduced into the reactor. The fuel feed into the reactor is adjusted to maintain a constant bed level in the reactor. Thus the fuel residence time in the reactor varies with the gas demand. The work with the pilot unit indicated that the gas composition was insensitive to gas demand. The range of gas composition is shown in Table 10. The production of hydrogen is enriched by the addition of steam into the air supply for the reactor. No gas-composition analysis has been performed on the full-scale reactor.

The gasification process is started by introducing hot charcoal into the reactor. The fuel and air are then fed to the reactor. To stop the reaction the air to the reactor is shut off. The reactor retains sufficient heat to allow the process to start-up within two weeks by introducing the air to the system.

TABLE 10

GAS COMPOSITION FROM THE WESTWOOD POLYGAS SYSTEM

Component	Dry Gas (volume %)
Hydrogen	17.4 - 19.8
Carbon monoxide	21.8 - 26.0
Methane	2.5 - 2.7
Other hydrocarbons	0.5 - 0.9
Carbon dioxide	9.2 - 11.9
Nitrogen	42.0 - 45.4

(2) B.C. Research

B.C. Research have been active in the field of fluid-bed pyrolysis for 30 years. The early work emphasized the production of charcoal from wood residue. For a period in the mid-1970s, B.C. Research had a licensing arrangement with Alberta Industrial Development Ltd. for the development of charcoal-producing reactors. One reactor was manufactured and is now in operation in Wisconsin. That licensing arrangement is now stated to have been cancelled; however, B.C. Research's patents on its original charcoal reactor have expired and Alberta Industrial Development Ltd. are continuing to develop the process.

In the past two years, B.C. Research has developed a fluid-bed gasification unit. The pilot unit is rated at 1.5×10^6 Btu/hr. Tests have been performed with sawdust, hog fuel and coal. The results from this test unit have been encouraging enough to proceed with a preliminary design and feasibility study for the construction and development of a 30 million Btu/hr. gasification unit.

The feasibility study produced a preliminary estimate of $1,030,000 for the design and construction of the 30 million Btu/hr. reactor based on the present design. Development of the unit, if it proceeds, is likely to be a three-part affair with funding coming from the government, a forest products company where the reactor will be located, and a company interested in the manufacture of further units.

The B.C. Research system is unique in many aspects (see Figure 18). Firstly, it does not use sand for the fluid bed, but rather a bed composed of ash, charred wood and uncharred wood. This system has worked successfully for sawdust and coal, but when hog fuel has been run in the reactor, the bed has not been completely fluidized. This lack of fluidization apparently has not hindered the gasification of the residues and the feasibility study concluded that the system was operable.

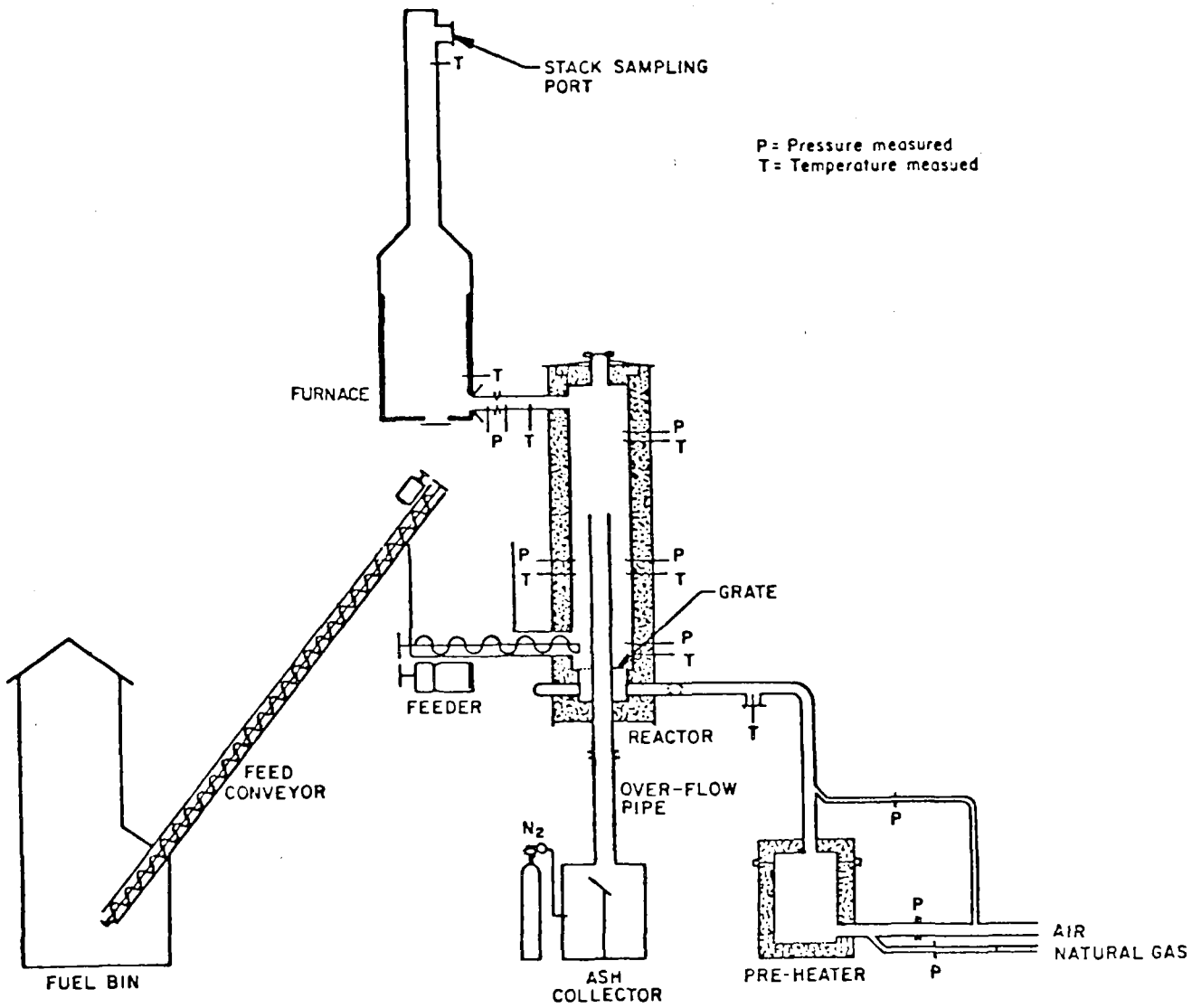

B. C. Research

Gasification System

Figure 18

Another unique aspect is the lack of gas-cleaning devices required to remove tars and water vapours from the combustor gases produced. These devices are stated not to have been necessary in the operation of the pilot unit. However, design work is currently being carried out on a gas-cleaning system. The addition of this equipment will increase the costs of the overall system.

Some particulate emission tests have been performed while the unit ran on sawdust. The results were less than the provincial Level A requirement, except at high fuel-loading rates (see Table 11). These values are significantly higher than those of Westwood Polygas, but that is expected since no gas-cleaning devices are used.

The efficiency of the system while running on hog fuel was 70 to 75%. The efficiency was defined as the heating value of the output gas, not including the latent heat of vapourization of the water present, divided by the fuel value of the wood input to the system. Also not included was the efficiency of the burner to produce energy from the gas.

Composition of the fuel gas produced depends on the depth of the fuel bed and the air-to-fuel ratio. The gas composition for three bed depths is shown in Table 12.

The feasibility study also made estimates of operating costs, so that a return on investment could be calculated. It was assumed that the system will successfully replace a natural-gas-fired device that operates 90% of the time. With these assumptions, a rate of return of 11.6% (before taxes) was determined. In many cases, the full 30 million Btu/hr. will not be required even 90% of the time. This will adversely affect the rate of return. Also start-up costs were estimated at 20% of the total annual gross operating costs. For the first few units, this is likely to be lower than the actual start-up costs. This again will effectively

TABLE 11

PARTICULATE EMISSIONS FROM
B.C. RESEARCH GASIFICATION SYSTEM

Firing rate (B.D. lb/hr/sq.ft.)	Moisture Content of Fuel (% Total)	Emissions (gr/sdcf at 12% CO_2)
61.5	43.6	0.090
65.1	44.2	0.079
54.8	49.6	0.067
62.2	53.9	0.082
63.3	53.6	0.086
70.7	42.5	0.127

TABLE 12

GAS COMPOSITION FROM
B.C. RESEARCH FLUID BED GASIFICATION

Component	3-Foot Bed (% by volume)	4-Foot Bed (% by volume)	5-Foot Bed (% by volume)
Hydrogen	3.0	5.8	13.1
Oxygen	6.9	0.8	1.3
Nitrogen	68.3	59.9	53.3
Carbon monoxide	13.9	20.4	15.8
Methane	1.1	1.7	3.7
Carbon dioxide	6.5	10.9	11.2
C_2 as Ethylene	0.4	0.5	1.6
Calorific value Btu/sdcf	72.1	111	157

lower the estimated rate of return.

A prototype system has recently been sold by B.C. Research to Saskatchewan Power for further tests. This unit will probably be sized between four and six million Btu/hr.

(3) Mellenger Gasodyne

E.R. Mellenger, a consultant in Saint John, New Brunswick, is selling gasification systems based on the Crossley Brothers Ltd. systems developed in the early 1900s. Mr. Mellenger would not provide any information on his system other than to state that he is only interested in turnkey jobs.

Crossley Brothers Ltd. produced about 600 plants between 1912 and 1940. These plants were often located in remote areas, specifically in Africa. One of the units was installed on Vancouver Island. The gasification system was used in conjunction with a gas engine, also produced by Crossley Brothers Ltd. Some of these systems are still working today.

The gas generator is a fixed refractory-lined cylindrical-steel chamber. The air for the system is drawn under slight negative pressure up through the fuel bed. The ash is removed from the system by means of a bomb-bay door arrangement. Many plants operated continuously for 12 months without the fire having to be withdrawn.

The fuel is fed into the reactor by means of an air-lock feeding hopper. The fuel falls under the force of gravity when the air lock is opened.

The gas from the producer is passed through a water scrubber and condenser, then through a centrifugal tar extractor, and finally through a filter and dryer before it is utilized.

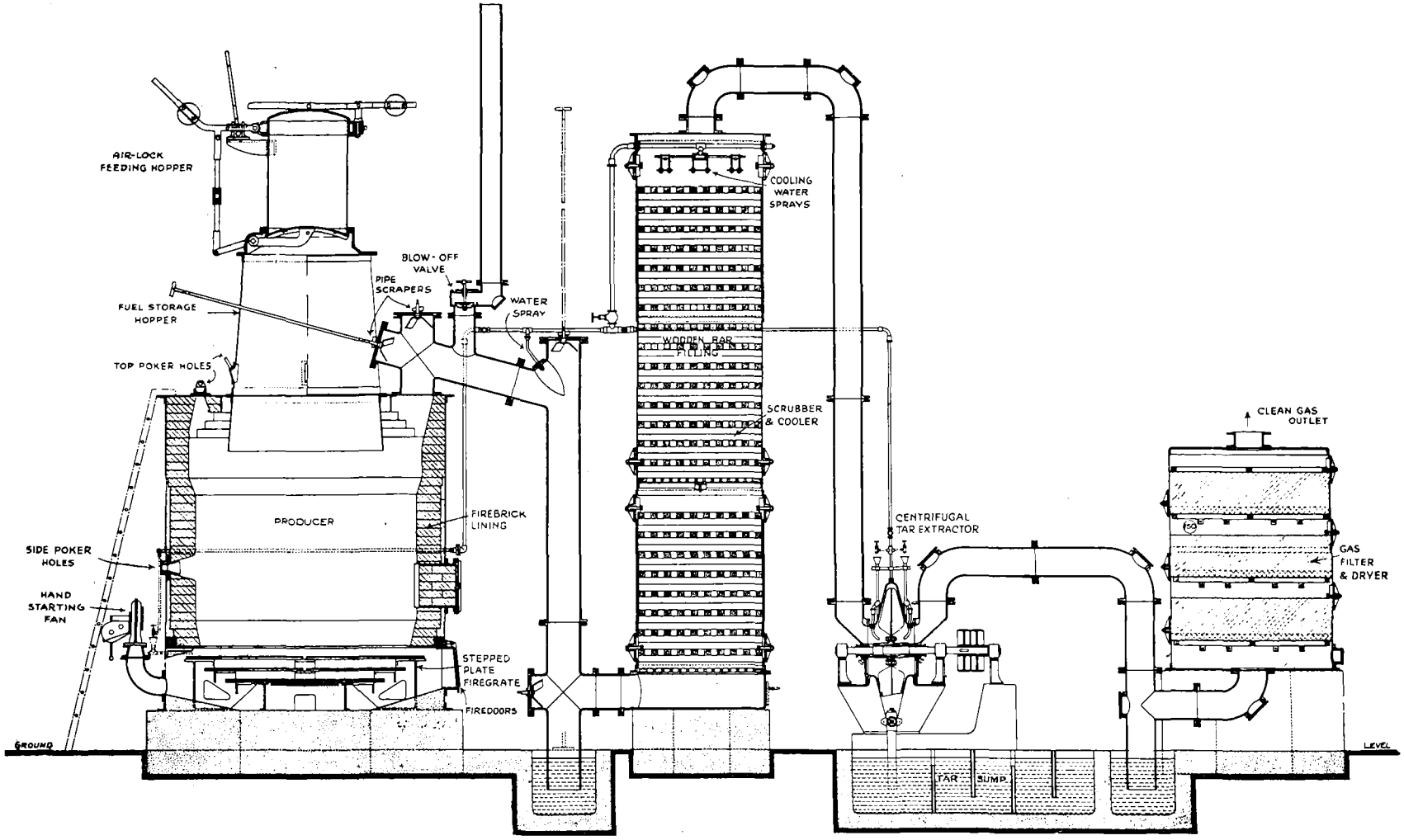

Original Crossley Gas Plant

Figure 19

One plant has recently been installed at a sawmill in Maine. This plant used the gases directly from the producer to fire a boiler. A number of problems have been encountered in sustaining the combustion process in the boiler. A condensing system is now being installed to remove water vapour from the gas stream. This unit is rated at 12 million Btu/hr.

Other systems are in the design or manufacturing stages. One system, of 8 million Btu/hr capacity, has been bought by the Government of Manitoba. The gas from the system will be used to run a diesel motor generator set.

See Figure 19 for a schematic of the original Crossley gas producer.

The system is not classified as proven technology because none of the new systems has been successfully operated by mill personnel. The requirements for gasifiers have changed in the past 50 years, so that some of the technology developed by the original Crossley Brothers Company is not now applicable.

No data are available on particulate emissions before and after scrubbers, nor on thermal efficiency of the system. Gas analyses are not available.

Claims that the raw gas can be used directly in diesel engines are dubious. While internal-combustion engines have been operated on wood gas in times of fuel shortage, they have incurred serious operating problems. Such raw gas may have performed reasonably well in older engine designs, which involved low speeds and low compression ratios and which had large clearances for moving parts. Such gas would be unacceptable in modern high-speed engines with low clearances.

(4) Forest Fuels Inc.

The company of Keene, New Hampshire, has developed a series of gasification systems ranging in size from 1.5 million Btu/hr. to

12 million Btu/hr. Several of these systems are in operation, but none of the operating systems has accumulated more than one year of operating time. The units that are operated are not yet automated and once per day the units must be shut down to clean ash from the grates.

The systems are not being actively marketed at this time, until the problems associated with the automatic control and the ash removal are solved.

The systems in operation require fuel dried to a moisture content of less than 20%. The fuel must also be sized to less than one inch.

The gasifiers are presently close coupled to the combustor. This minimizes problems of the dropout, but reduces the versatility of the reactors.

Gas analysis and accurate mass balances are not available at this time. Some information on feed rates and energy output supplied by the company indicate 100% efficiency in converting the wood residues to energy. This is, of course, highly unlikely.

(5) Andco-Torrax

The company has been developing a refuse-into-energy system since 1969. For the last five years, they have been operating a 75-ton-per-day engineering unit in Orchard Park, Buffalo, New York. At present, there is an 200-ton-per-day commercial installation in Luxemburg and two other commercial installations under construction in Europe.

On July 1, 1969, Torrax systems entered into a contract with the Erie County, New York, to build and operate a 75-ton-per-day plant. The prototype plant was made possible by the US Federal Government, acting under the 1965 Waste Disposal Act, by providing a demonstration grant for the development of a waste-disposal technology. Other grants came from several large state and private associations.

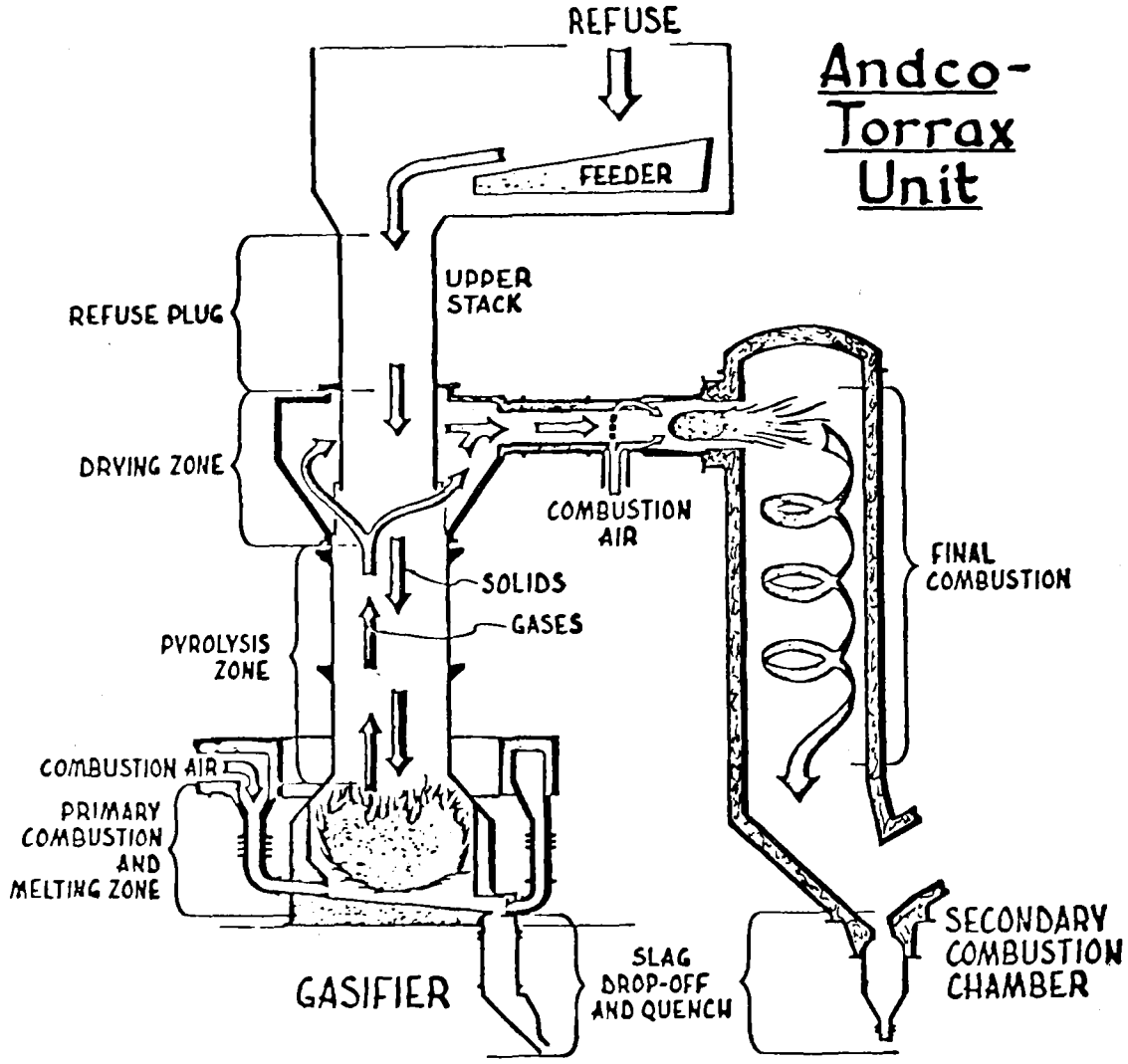

Gasification System

Figure 20

The waste accepted by the system consists mainly of household and commercial material, with some industrial waste. No shredding or pretreatment of the waste is necessary save for the cutting up of articles that will not pass through the charging hopper of the vertical-shaft furnace.

The waste is fed into the vertical-shaft furnace by an overhead crane, through a charging hopper. Extremely high-temperature combustion air, preheated in a superblast heater, is blown in at the base of the gasifier (shaft furnace), at a temperature of up to 2000°F. As the waste, which is kept at a prescribed level in the furnace, falls slowly through the gasifier, the readily combustible products are burned. Hot gases, permeating through the refuse, decompose the organic material to form combustible gases. (see Figure 20).

The non-combustibles and difficult to burn objects fall to the bottom of the furnace where the high heat melts them into a liquid slag. Temperatures at the base of the gasifier range from 2600°F to 3000°F. The liquid-slag mixture of molten metals and inorganics flows from the gasifier to a water chamber where the metal is frozen into small droplets and the inorganic slag produces an aggregate-quality frit. These two products are separated and sold. Approximately 4 to 6 tons per day of metal and 10 to 15 tons per day of frit are produced from 75 tons of solid waste.

The gases from the top of the gasifier contain no free oxygen and consist mainly of carbon monoxide, hydrogen, hydrocarbons and nitrogen. Particles of ash, carbon, etc., are entrained in the gas flow. The gas stream from the gasifier (at 120-150 Btu/cu.ft.) is admitted tangentially to the igniter in order to fuse incombustibles to the refractory wall. The gas-solid mixture is ignited at 2000°F with an estimated 15% excess air, to carry the combustion reaction to completion. The solid slag is treated in a similar manner to that emitting from the gasifier. Heat is extracted from the hot-gas stream to produce steam in a waste-heat boiler and the gas then

passes a wet scrubbing system and a fibre filtering system before it is released to the atmosphere. The steam produced in the waste-heat boiler amounts to 10,000 - 18,000 lb/hr. of steam, depending on the waste heat value.

To date, wood residues have not been used as the primary input to the system. Andco Torrax have participated in a study in which wood residues, municipal refuse and pulp-mill clarifier sludge would be gasified to produce energy for a pulp mill.

The capital cost of commercial units is not yet established, but, based on experience of similar units, a cost of $20,000 to $30,000 per ton per day is likely. Operating costs are not yet established.

The system would be classified as being in the commercial prototype stage.

It has been indicated that a minimum plant for utilizing municipal waste would be about 500 tons per day. The company manufactures 200-ton-per-day units, but prefers to assemble these in batteries of two or more.

(6) Union Carbide - conversion of solid waste by gasification, Purox Process

Union Carbide's Purox system has been in operation since 1970 in a pilot plant in Tarrytown, New York. The data presented here are scaled-up from the pilot plant to a 200-ton-per-day plant which has been constructed and is operational in South Charleston, West Virginia. Testing on the full-size plant began in 1974, but no figures are available as yet. Union Carbide is attempting to modularize the system and the South Charleston installation is one step towards optimizing the module size.

The Purox system (see Figure 21) accepts waste of all types. Large items are broken down to accommodate the system. Recycle and resource recovery could be incorporated into the system provided

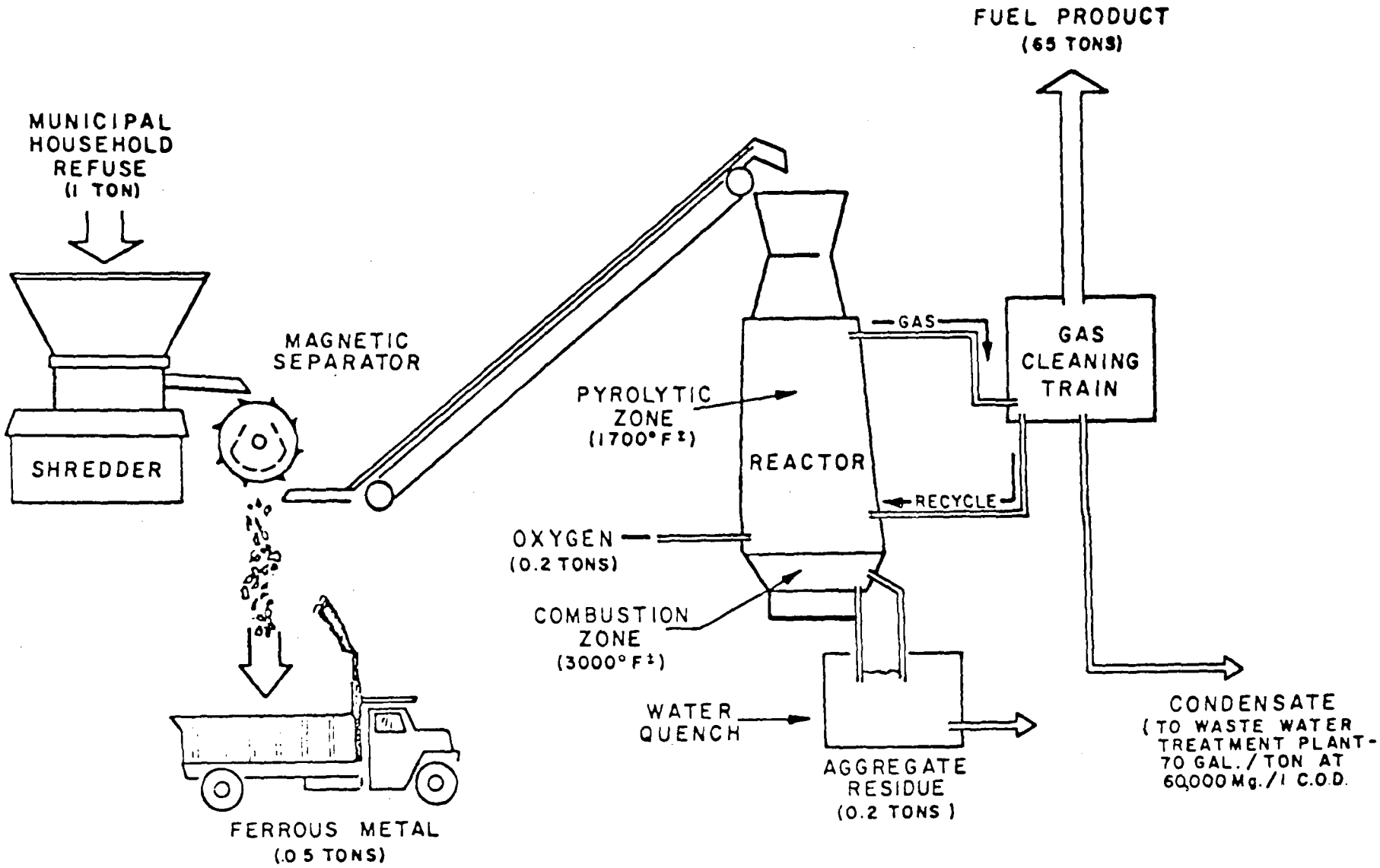

Union Carbide

Purox System for Municipal Refuse

Figure 21

markets existed and were stable.

Waste entering the plant can be stored or fed directly into a feed hopper above the vertical-shaft furnace. A feed lock regulates the flow of solid waste. Once inside the furnace, the organic materials are gasified in a partial oxygen atmosphere. The pyrolysis zone is located in the upper middle portion of the furnace.

The hot gaseous mixture (see Table 13) rises in the vertical furnace through the descending waste, drying the waste as the gases cool. As the gas leaves the furnace through a duct, it contains water vapour, some oil mist and minor amounts of ash and organics. These constituents are removed by a gas-cleaning system and returned to the furnace. An alternate processing system could convert the cleaned waste to a salable fuel oil similar to No. 6 fuel oil. After cleaning, the gas passes through a condenser. The resultant dry gas is a clean-burning fuel. This can be used as a supplementary fuel in a utility boiler or other fuel-consuming operation without down-rating the boiler or making extensive modifications to it. Since the fuel is essentially sulphur-free and contains one-tenth the amount of fly ash allowable by federal US standards, it is an ideal fuel for existing gas-fired furnaces. The gas produced has a heating value of 300 Btu per cu.ft. dry as compared to natural gas with a heating value of 1000 Btu per cu.ft. dry.

The heating value of the waste in the Purox process is equal to 9×10^6 Btu/ton. The system efficiency is 75% leaving a fuel content of 6.4×10^6 Btu/ton. The fuel resulting from one ton of waste is 17.0 mcf of 375 Btu gas. Through combustion at 86% efficiency, there results 5.5×10^6 Btu/ton of useful energy.

The fuel gas produced by a 1000-ton-per-day plant will yield 21,000 kw, if used as fuel for a gas turbine. Internal plant use would be 7,000 kw, leaving 14,000 kw for sale.

TABLE 13

PUROX PRODUCT GAS ANALYSIS

Constituents	Typical value % Dry Basis
H_2	24.0
CO	40.0
CO_2	25.0
CH_4	5.6
C_2H_2	0.7
C_2H_4	2.1
C_2H_6	0.3
C_3H_6	0.3
C_3H_8	0.2
C_4	0.5
C_5	0.4
C_6H_6	0.3
C_7H_8	0.1
C_6+	0.2
H_2S	0.05
CH_3OH	0.1
Organic Vapours*	0.15

Heating Value, Dry Basis, Btu/scf	
Typical Range	345-370

*Higher alcohols, aldehydes, ketones, organic acids

Date of Analysis: October 22, 1975

The second product of the gas-pyrolysis process is carbon char. The carbon char follows through the burning waste to the hearth at the base of the furnace where it enters the combustion zone. The combustion zone is fed by a pure oxygen stream and the temperatures at the hearth are sufficiently high to melt and fuse all non-combustible material. The molten slag continuously overflows the hearth into a water-quench tank where it forms a hard, sterile, granular product. The volume of the solid by-product is equal to 2 to 3% of the volume of the incoming waste. The slag is suitable for landfill or other more valuable uses if markets exist.

By using pure oxygen instead of air, each plant must be accompanied by an oxygen-producing facility, which greatly increases capital and operating costs. Several advantages to the system are gained by using pure oxygen, however, and these may offset the cost of the oxygen system. The oxygen system is much more flexible in accommodating seasonally varying waste types. Off-site use of the fuel is possible for distances up to one or two miles because the absence of nitrogen leads to a high heating-value gas. The Purox system produces one-twentieth as much gas volume to clean as the conventional incinerators, which results in a reduced cost in air-pollution control equipment.

Union Carbide are completing construction of a 10 ton/day demonstration plant at their Tonawanda laboratories near Buffalo, New York. They plan to determine the operating parameters for wood residues at this plant. It will be some time before results are available which would indicate gas analysis, heating value of the gas and pro forma capital and operating costs.

Capital costs for the system probably will range between $30,000 and $35,000 per ton per day of waste for a plant capacity of 600 tons/day. The unit will not be particularly suitable for small-scale flexible operation because it requires an oxygen plant as an integral component.

The system rates as being in commercial prototype operation. A large-scale pilot unit has been operated for a number of years, but no full-scale plant has been sold.

(7) Bio-Solar Research and Development Corp. (Woodex)

Bio-Solar Research and Development Corp, of Eugene, Oregon, have developed a process for pelletizing hog fuel and a process for gasifying the pellets. Licensing agreements with parties throughout the world are being negotiated. In B.C. the rights to manufacture Woodex pellets have been purchased by Doman Industries Ltd. and S. Madill Ltd. A third company, Western Energy Ltd., has been set up for the purpose of selling pellets and developing a gasification system in the province.

Western Energy Ltd. was not prepared to divulge its plans for inclusion in this study. It is known that they are planning to develop a gasification system of their own. They have already approached a number of forest products companies to sell a total energy concept.

The Bio-Solar gasification process was developed to produce energy to dry hog fuel prior to pelletizing. Air is introduced into the reactor containing the pellets. The combustible gases are withdrawn at about 500°F. The gases are passed through a tar scrubber (largely ineffective), then through a knock-out drum and then to the gas burner. Some ash is removed from the gasification reactor once per week during a shutdown.

Bio-Solar have promoted the concept of gasifying dry pellets to produce a fuel gas for use in boilers and it is understood American Can Co. Inc. at Eugene experimented with a small reactor. No data are available on the performance of the unit nor on the economics of operation.

Technical data on both the pelletizing and gasification processes are very limited. The dry gas produced has a heat content of about 130 Btu/cu.ft. according to a rough heat balance on the Brownsville, Oregon, Woodex plant.

Only two reactors have been built and operated by Bio-Solar to date. One is 6 ft. in diameter and consumes 5-1/2 tpd of pellets. The second reactor is 8 ft. in diameter and is expected to use 10 tpd of pellets. Both of these reactors are small. The energy output from the reactors is 2.6 million Btu/hr. and 4.8 million Btu/hr. respectively based on dirty gas out. If the tars are removed from the gas, the available energy drops to 1.6 million Btu/hr. and 3.0 million Btu/hr.

The Bio-Solar Research and Development Corporation's gasification systems can only be considered as pilot units. The lack of technical information regarding construction, operation and mass and energy balances make any evaluation of the process difficult. No accurate cost estimates are available for a gasification process.

The gasification unit appears to be a simple fixed-bed reactor operating at a relatively low temperature (possible 900°F). The gas produced is high in tars, oils and solid particulates, and it is probable much of the ash is emitted with the gas.

The economices of producing wood pellets are discussed under "Wood Densification Processes".

(8) Canadian Industries Limited

Canadian Industries Ltd. (CIL) have been developing a fluid-bed gasification system for the past two years. Most of the development work has been performed on municipal solid wastes, although wood chips have been used successfully in the unit.

The prototype has a capacity of one ton/hr. and is fully automated. The development of the prototype is not yet complete and CIL will not release any engineering data until such time as the development is complete.

CIL are interested in the application of their unit to wood residues. If and when the prototype work can be operated reliably and CIL release further information, this system should be investigated.

(9) University of California at Davis

The Department of Agricultural Engineering at Davis has developed a gasification system for agricultural wastes (see Figure 22). The system is based on a Swedish design. Volvo are also developing a system for mobile engines based on the same principle.

The system is a down-draft gas producer. The gas given off contains about 25% carbon monoxide. The fuel is metered into the top of the reactor through an air lock. The ash is removed from the bottom through the air lock. The system has experienced difficulty in removing the ash continuously and to date it has only been operated on a batch basis.

The present unit is intended for research only. An improved ash-removal system is currently being installed. Further research is slated for early in 1978. Fuels to be used include rice hulls, cotton-gin trash, walnut shells and wood residues.

Any commercialization of the system will have to be done by parties outside the university. At the present time, two companies are interested in the development, but neither has a customer willing to take the first system. No data are available on particulate emissions nor on quality of solid fuel required. The agricultural wastes mentioned are chiefly quite dry.

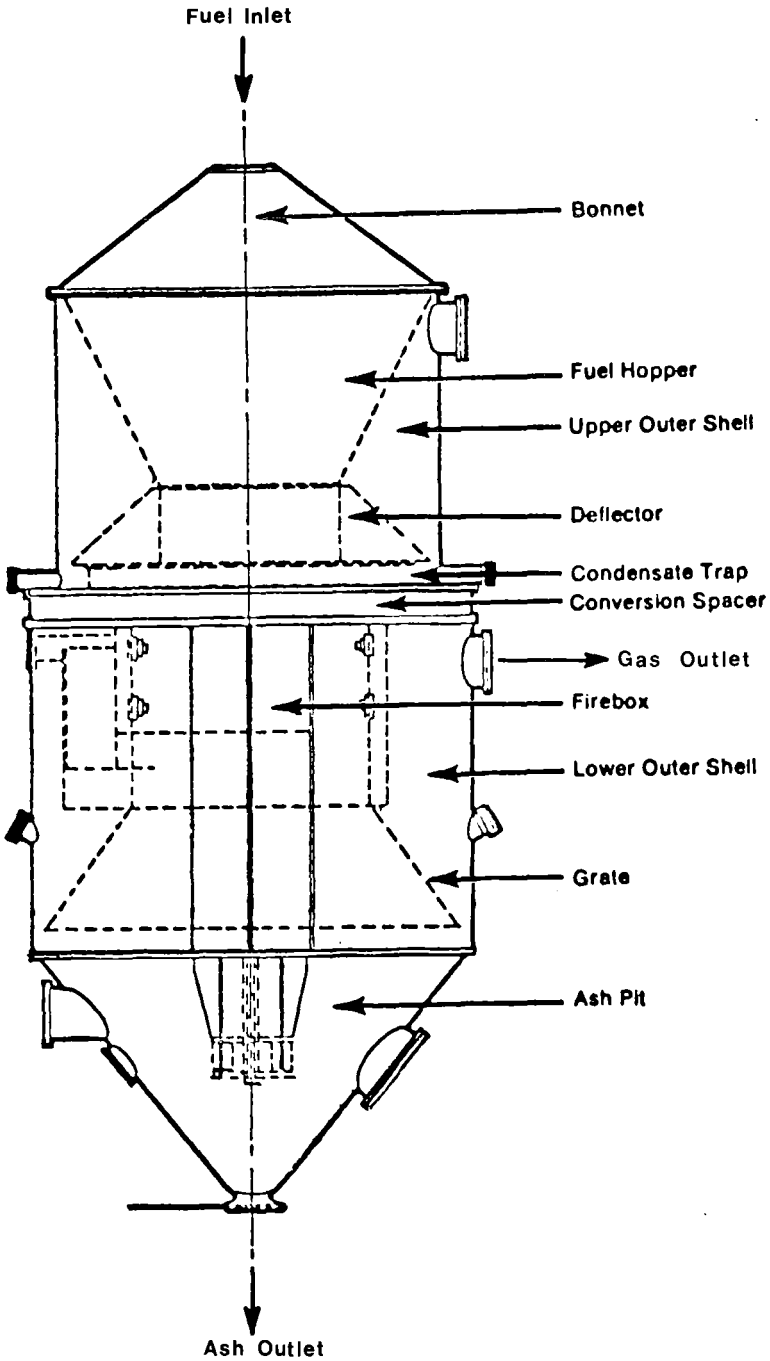

University of California at Davis

Gasification System

Figure 22

(10) Eugene Water and Electric Board

The public utility is in process of developing a fixed-bed gasifier for wood residues. The program is still in its earliest stage of development (pilot scale), so very little technical information is available for an evaluation.

The unit appears to be a fixed-bed, shaft-type reactor with top feed of fuel and bottom feed of air. Gases are withdrawn from the top and scrubbed prior to proposed combustion in an existing hog-fuel power boiler.

No data are available on costs, gas quality and particulate loading.

G. Pyrolysis

1. Tech Air Corporation
2. Alberta Industrial Development
3. Occidental Research
4. US Bureau of Mines

(1) Tech Air Corporation

Tech Air Corporation is the licensee of the pyrolysis process developed at the Georgia Institute of Technology. Research into gasifying peanut shells started in 1968. Further pilot units at Georgia Tech were operated on wood residues. In 1973, Tech Air constructed a 50-tpd plant to process wood residues. This plant was field tested for two years and has been successfully on stream for over one year.

Analysis of the combustion gases has shown that the system meets the US Environmental Protection Agency standards for particulate emission.

GASIFICATION

	Westwood Polygas	B.C. Research	Mellenger Gasodyne	Forest Fuels	Andco Torrax	Union Carbide	Bio-Solar (Woodex)	Canadian Industries Ltd.	University of California	Eugene Water Board
[1]Stage of development	b	c	b	b	b	b	c	b	b	d
Emissions less than 0.100 gr/sdcf?	Yes	Yes	?	?	?	?	?	?	?	?
Is system fully automated?	Yes	No	?	No	Yes	Yes	No	Yes	No	No
Maximum moisture content, % mc (wet)	50	55	?	20	([2])	([2])	15	([2])		
Maximum fuel size	8 in	3 in	3 in	1 in	([2])	([2])	½in	([2])		3 in
Sizes available x 10^6 Btu/hour										
0-10	X	X	X	X			X	X	X	
10-20	X									
20-30										
> 30					X	X				
Costs, $\$10^3$ /10^6 Btu										
In size 0-10										
10-20										
20-30										
> 30		34			140		30			
Turndown ratio	4	2				5				
Form of energy	---------- combustible gases ----------									
Is auxiliary fuel necessary?	No	No	No	No	No	No	No	No	No	No

[1]a - Proven
b - Prototype
c - Pilot
d - Experimental

[2]No reliable operating data for wood fuels

The energy from the system is available in several forms. The pyrolysis process proceeds at a low temperature, so that in addition to combustible gases a considerable amount of pyrolytic oil and gas are produced. An energy balance on the system has shown that the char and pyrolytic oil each account for 35% of the energy input in the dry feed and the combustible gases account for 21.7%. The remainder presumably represents heat loss.

The system requires that the fuel have a moisture content of less than 5%. The systems in use have used the combustible gases in dryers to dry wood residues to the required levels. The available energy is, therefore, in the form of char and pyrolytic oils, both of which have heating values of 10,000 - 13,000 Btu/lb.

Tech Air will only discuss costs on a site specific basis, so that no cost estimates are available.

(2) Alberta Industrial Developments Ltd.

Alberta Industrial Developments Ltd. had a licensing arrangement with B.C. Research for the manufacture of charcoal-producing, fluid-bed gasification systems, in the early 1970s. The agreement has now been terminated, but Alberta Industrial Developments are still actively promoting their "Thermax Reactor" (see Figure 23).

The Thermax reactor has the capability of producing both a low Btu gas and charcoal. The present unit emphasizes charcoal production and this is the direction that the company is actively pursuing. The charcoal has a heating value of 13,000 Btu/lb. One system has been built and operated at a sawmill in Onalaska, Wisconsin. The company claims that this system has operated for more than 6,000 hours and that the technology has been perfected. This system is rated at 75 tpd.

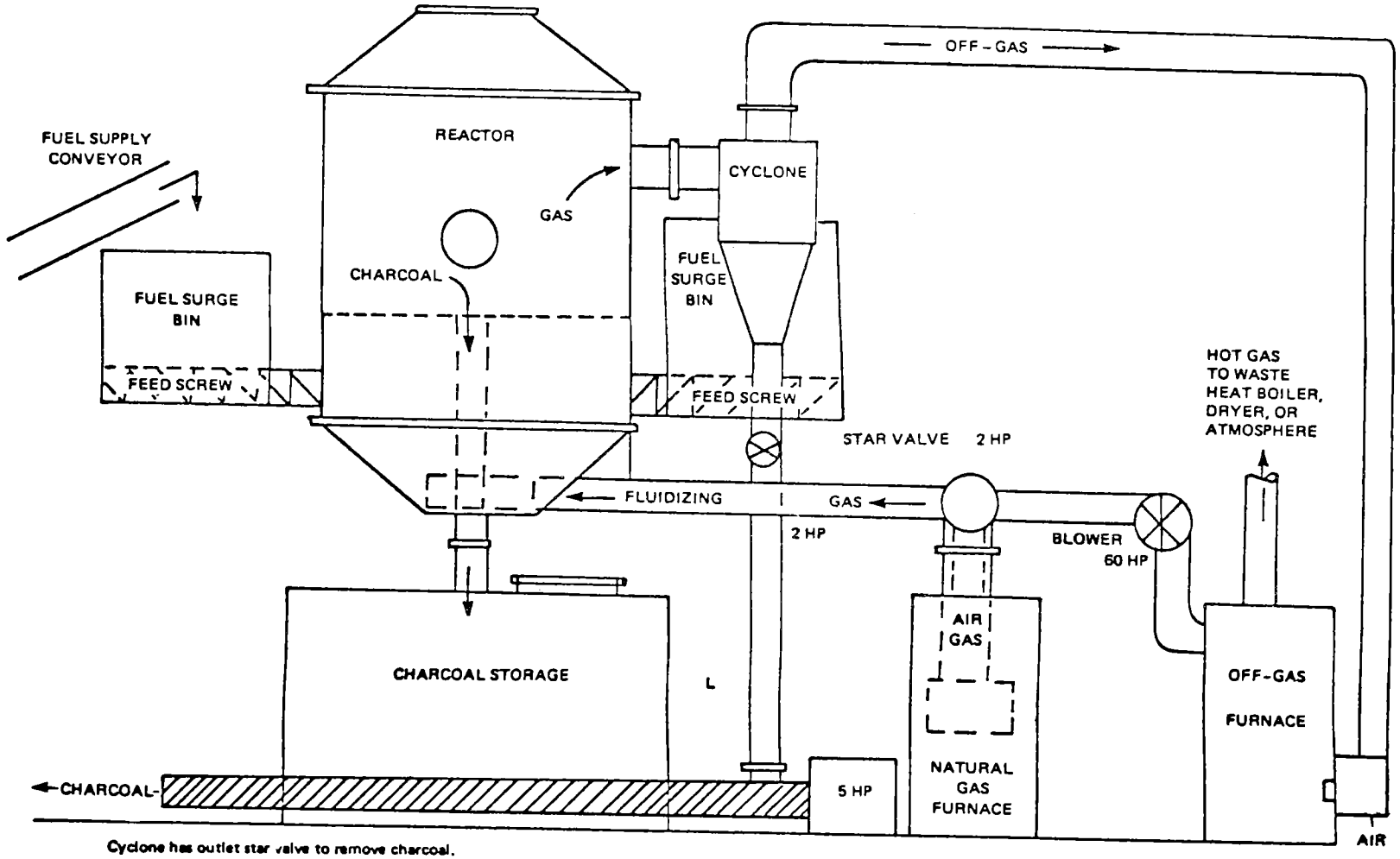

Cyclone has outlet star valve to remove charcoal.
Natural gas fired furnace fluidizes gas for start up.

Alberta Industrial Developments Ltd.

Charcoal Reactor System

Figure 23

A second system is under construction. The physical design of the second unit has been changed markedly, based on information gathered from the operation of the initial system. It is expected that the second unit will have fewer of the mechanical problems of the first unit.

The system does require a skilled operator. The company claims that one operator can manage several reactors. The training of the operator would require about four weeks to transfer the necessary technology.

The reactor is capable of utilizing wood residues which have moisture contents up to 50% (total weight basis). The fuel is augered into the fluid bed so that it must be hogged to prevent plugging of the screw feeder.

The manufacturer has estimated the costs of a 160 million Btu/hr. reactor would be $1,200,000. The operating costs for a 32 million Btu/hr. reactor have been estimated at $7.50 per operating hour. This operating cost includes the amortization of the capital costs over a 10 year period, but no value has been assigned to wood waste. The costs of the gases produced are claimed to be $0.25 per million Btu. This is inconsistent with joint production of gas and char and the value may be in doubt.

The system and equipment are judged to be in a commercial prototype developmental stage and costs probably are not reliable.

(3) Occidental Research

The Garrett system undergoing construction in San Diego County, California, is based on a 4-ton-per-day pilot plant which was completed in 1971. Theoretical processes derived from a 3-lb.-per-hour test unit were confirmed in the pilot plant. San Diego County chose the Garrett system and began constructing it in 1973. On completion of the testing of the full-size unit, San Diego County will fully maintain the facility.

The location of the 200-ton-per-day plant is a 5.3 acre industrial site obtained from the city of El Cajon under a long-term lease. The site is located at least 1600 ft. from residential zoning and has ample access routes.

The El Cajon plant accepts all types of shreddable municipal waste. Preparation and separation of this solid waste is necessary, as only the organic fraction is utilized in the pyrolysis operation. The most extensive preparation prior to firing of any system to date is required by the Garrett process, since its pyrolysis reactor must burn only organic material.

The pyrolysis reactor is a vertical, stainless-steel pipe through which the organics are pneumatically blown. Inside the reactor, particles of hot char provide the energy needed to pyrolyze the organic material. The organics enter the pyrolysis reactor at 1400°F and are mixed and burned in an endothermic reaction producing gas and carbon char mixture. The mixture temperature on leaving the reactor has dropped to 950°F. The char and gas are separated in a cyclone or mechanical separator.

The char, which is the product used in the reactor as the heat exchanger, is stored. Prior to its use, it is heated to 1400°F. Excess char is landfilled, but a possibility exists that it may be recyclable.

The process gas is cooled quickly to 175°F in an oil decanter. The rapid cooling is necessary to halt the chemical reaction and prevent a reduction in the fuel yield. The cooling oil consists of No. 2 fuel oil mixed with oil from the pyrolysis process. Approximately 1.3 barrels of fuel similar to No. 6 fuel oil (see Table 14) will be recovered from each ton of waste processed. The liquid fuel product goes either directly to a storage tank or is centrifuged if the solids content is too high. One fault with the fuel oil is its high ash-producing capability which may make

it unfeasible to use with conventional fuel oil. Low-grade fuel oil is burned in a small internal boiler to produce heat for various areas of the plant.

The gross heating value of the solid waste is equal to 9.2 x 10^6 Btu/ton of waste. Auxiliary fuel in the form of No. 2 fuel oil is added at a rate of 0.66 gal.per ton to increase the gross heating value at input to 9.20 x 10^6 Btu/ton. The pyrolysis process operating at 62.4% efficiency yields an oil product similar to No. 6 fuel oil, with a heating value of 5.8 x 10^6 Btu/ton of waste. Burning the oil with an efficiency of 83% yields an available heating value of 4.8 x 10^6 Btu/ton. The overall energy recovery efficiency is 52%.

Air streams containing entrained waste particles are put through a baghouse filter before being released to the atmosphere. The gas stream, which could contain combustible or odourous components, is passed through an afterburner and subsequently exhausted through another baghouse filter. The afterburner is fired by recycled product gas from the pyrolysis process, and also functions as the process heater for the drier and various gas and air streams in the process. Emissions from the pilot unit are as follows:

SO_2	- 70 ppm
NO_x	- 8 to 100 ppm
HCl	- 100 ppm
Particulate	- 0.05 gr/scf

The unusable solid residue to be landfilled, constitutes 16% by weight (5% by volume) of the incoming solid waste. About 50% of this fraction is inert ash, derived from the pyrolysis process. The other 50% is rejected material from the resource recovery operation. Approximately 75% of the unusable residue is inert.

TABLE 14

TYPICAL PROPERTIES OF NO. 6 FUEL OIL
AND OCCIDENTAL'S PYROLYTIC OIL

	No. 6	Pyrolytic Oil
C, wt %	85.7	57.0
H	10.5	7.7
S	0.7-3.5	0.2
Cl	-	0.3
Ash	0.05	0.5
N		1.1
O	2.0	33.2
Specific gravity	0.98	1.30
Btu/lb.	18,200	10,600
kJ/kg.	42,300	24,600
Btu/gal.	148,800	114,900
kJ/kl.	41,500	32,000
Pour point, °F	65-85	90*
°C	18-29	32*
Flash point, °F	150	133*
°C	66	56*
Vicosity		
SSU at 190°F	340	1150
N s/m^2 at 88°C	0.064	0.23*
Pumping temperature, °F	115	160*
°C	46	71*
Atomization temperature, °F	220	240*
°C	105	116*

*Pyrolytic oil containing 14% water, as marketed.

The 200-ton-per-day plant proposed by Occidental Research will be operating below the level commonly considered cost effective. Economics for a 1000-ton-per-day plant are shown in Table 15.

The process is presently in operation, but little data are available as yet. The company is proceeding cautiously in order to develop accurate operating data. The system represents excellent engineering and planning and demonstrates how new technology should be developed without pressure for immediate sales of units.

It is doubtful that the system will be of general interest to the forest products industry.

Capital costs for a domestic waste-fueled plant are shown in Table 15. The feed-preparation section would obviously be much less costly for wood waste than for domestic waste.

TABLE 15

ESTIMATED ECONOMICS

OCCIDENTAL RESOURCE RECOVERY SYSTEM INCL. PYROLYSIS

Second quarter 1975 costs, geographically normalized.

	1000 TPD	2000 TPD
Capital investment	$25.2 MM	$37.9 MM
Total interest	26.1	39.2
Total capital cost	51.3	77.1
Capital cost/ton	$ 7.81	$ 5.87
Operating cost/ton	15.70	12.08
Revenue/ton	(12.02)	(12.02)
Net Cost/ton	$11.49	$ 5.93
Net Cost/metric ton	12.67	6.54

(4) United States Bureau of Mines

Bechtel National Inc. has been commissioned by the US Energy Research and Development Administration to test the feasibility of producing synthetic crude oil from biomass using a $3.7 million pilot plant constructed at the US Bureau of Mines station at Albany, Oregon. The process is based on the original US Bureau of Mines experimental process for producing oil by hydrogen or carbon monoxide reaction with coal, wood, etc., under appropriate conditions.

The Albany pilot plant is rated at 3 tons per day running at about 700°F. Since it is only a pilot plant designed to demonstrate principles, no accurate scale-up data are available.

The concept is to convert biomass (wood, field crops, etc.) to an oil which can be used as fuel or as a source of chemical intermediates. The aim is to produce oil at a price competitive with probable future crude oil costs.

The process is technically feasible, but there still are many parameters to be fixed before a commercial plant can be designed. The pilot plant is used to obtain data for scale-up, but Bechtel believe there are many unknown factors to be established before commercial cost estimates can be prepared.

At present, the minimum plant size for commercial operation is considered to be 1000 tons per day. This size, incidentally, is predicted on having to assign a value for feed material. The program feels it is fallacious to assume waste materials are available at no cost, and suggests that a value of $45 per dry ton for field wastes may not be unreasonable.

This process is not suitable for individual mills. However, where masses of wood waste are available it should be considered as a contender for energy and chemicals recovery. It is a complex chemical plant and represents application of advanced technology to produce valuable materials, not just energy.

PYROLYSIS

	Tech Air Corporation	Alberta Industrial	Occidental Research	U.S. Bureau of Mines
[1]Stage of development	b	b	b	c
Emissions less than 0.100 gr/sdcf?	Yes	?	Yes	?
Is system fully automated?	Yes	No	Yes	No
Maximum moisture content, % mc (wet)	5	50	([2])	
Maximum fuel size	3 in	3 in	([2])	
Sizes available x 10^6 Btu/hour				
0-10				
10-20				
20-30	X			
> 30		X	X	
Costs, $\$10^3$ /10^6 Btu				
In size 0-10				
10-20				
20-30				
> 30		7.5	150	
Turndown ratio		2		
Form of energy	--- combustible liquids and solids ----			
Is auxiliary fuel necessary?	No	No	No	No

[1]a - Proven
b - Prototype
c - Pilot
d - Experimental

[2]No reliable operating data for wood fuels

H. Wood Densification Processes

(1) Pres-to-Log process, Lewiston Wood Briquetting Co. Inc.

The Pres-to-Log process and other similar processes have been manufacturing fuel logs from finely divided dry wood waste for some 35 years. Typically, a log is 3-1/2 to 4 inches in diameter and 12 inches long with a density of about 62 lb. per cu.ft.

These logs can be burned effectively in boilers, but their manufacturing cost normally dictates that they be sold for premium-grade fireplace fuel.

Since most log-producing processes require dry waste, the potential for such logs, apart from their cost, in energy recovery is poor.

The Lewiston Wood Briquetting Co. at one time developed a machine for making a stoker fuel in the form of one-inch-diameter pellets. The system never became popular.

(2) Woodex process, Bio-Solar Research and Development Corporation

The gasification section of the Woodex process was described earlier under Gasification Processes. Actually, as was pointed out, the gasification unit at the Brownsville plant serves the purpose only of providing heat for drying hog fuel to make pellets. Bio-Solar Research and Development Corporation have devoted most of their efforts to making and selling wood pellets as a stoker-boiler fuel.

The Brownsville plant is the only one presently operating a Woodex plant. Since it utilizes parts of a non-operating particle-board plant, it has been difficult to establish capital and operating costs. Woodex personnel claim that they are making wood pellets, exclusive of raw material cost, for about $6.50 per ton and selling them at $20.00 per ton fob plant.

The Brownsville plant produces 120 tons per day of pellets working at maximum rate, 24 hours per day. It uses some 800 hp of installed electrical capacity and purchases a small amount of natural gas.

Estimates for the same plant constructed in B.C. indicate a cost of at least $400,000 (excluding property) and a production cost (excluding fuel cost) of $14.00 to $16.00 per ton.

The pellets are excellent fuel and undoubtedly will burn well in a suitable boiler.

A question which arises is why Woodex gasifies some pellets to produce gas for drying hog fuel when dry hog fuel could be pulverized and fired in a Coen or similar burner fitted to the rotary dryer?

(3) Guaranty Performance Co. Inc.

This company has developed its ROEMMC process for producing either shredded or pelletized dry fuel from sawmill waste, domestic refuse, agricultural wastes and the like. Wood residue pellets appear to be identical with those made by Woodex, which probably is not surprising in view of the fact that both use standard pelletizing equipment modified to suit the feed material.

Pelletizing is certainly not a new process and the procedure of forming dry wood waste into pellets is not unique.

APPENDIX A

NAMES AND ADDRESSES OF MANUFACTURERS

Alberta Industrial Developments Ltd.
1700 Cambridge Building
Edmonton, Alberta
T5J 1R9
(403) 429-4094 Mr. R.P. Assaly

Andco-Torrax Limited
P.O. Box 972
Burlington, Ontario
L7R 3Y7
(716) 896-8181 Mr. P.E. Davidson

Anga and Varme A.B.
Halmstad, Sweden
Local Distributor: The D.E.T. Co. Ltd.
905 Commerce Street.
Thunder Bay, Ontario
P.O. Box 1083
P7C 4X9
(807) 577-7551 Mr. T. Gunnell

Babcock & Wilcox Canada Ltd.
1055 West Hastings Street
Vancouver, B.C.
V6E 2E9
(604) 681-7341 Mr. N. Jeppesen

Basic Environmental Engineering Inc.
21W161 Hill Street
Glen Ellyn, Illinois 60137
(312) 469-5340 Mr. J. Basic
Mr. M. Adamski

B.C. Research
3650 Wesbrook Mall
Vancouver, B.C.
V6S 2L2 Dr. D.W. Duncan

Berg & Starck A.B.
Norrtalje, Sweden
Local Distributor: Brunette Machine Works Ltd.
150 East Columbia Street
New Westminster, B.C.
V3L 3W1
(604) 522-3977 Mr. M. Pousette

Canadian Industries Limited
Environmental Improvement Business Area
P.O. Box 1657
Kingston, Ontario Mr. J. Kennedy
(613) 544-1541

Coen Company, Inc.
1510 Rollins Road
Burlingame, California 94010
(415) 697-0440 Mr. J.H. White

Local Distributor: Industrial Process
Heat Engineering Ltd.
680 Raymur Avenue
Vancouver, B.C.
V6R 2R1
(604) 254-0461 Mr. Eric Panz

Combustion Power Company Inc.
1346 Willow Road
Menlo Park, California 94025
(415) 324-4744 Mr. D.R. Moody

Consumat Systems Inc.
P.O. Box 9379
Richmond, Virginia 23227
(804) 746-4121 Mr. W.O. Wiley

Local Distributor: K.O. Kinzer & Associates Ltd.
Suite 810, 525 Seymour St.
Vancouver, B.C.
V6B 3H7
(604) 681-0315 Mr. K.O. Kinzer

Copeland Process Limited
3 Place Ville Marie
Montreal, Quebec
H3B 2E3
(514) 861-7411

Crossley Gasifier
108 Carwarthen Street
Saint John, New Brunswick
E2L 2N8
(506) 657-2764 Mr. E.R. Mellenger

Door-Oliver-Long
174 West Street South
Orillia, Ontario Mr. K. Smith

Energex
Moore Canada Ltd.
1900 No. 6 Road
Richmond, B.C.
V6V 1P2
(604) 273-3141 Mr. L. Ross

Energy Products of Idaho, Inc.
Coeur d'Alene Industrial Park
Atlas Road
P.O. Box 153
Coeur d'Alene, Idaho 83814
(208) 667-7481 Mr. N. Sowards

Local Distributor: Interior Mill Equipment Ltd.
P.O. Box 758, Grand Forks, B.C.

Enertherm, Inc.
417 Gates Street
Mount Vernon, Washington 98273
(206) 336-3167 Mr. S.L. Johnson

Envirometrix Inc.
c/o Thermal Efficiency Inc.
P.O. Box 1869
Seattle, Washington 98111
(206) 622-6767 Mr. C. Swanson

Eugene Water & Electric Board
500 East Fourth Avenue
Eugene, Oregon 97401 Mr. O.D. Brown

Fincraft Fabricators
2538 Barnet Highway
Coquitlam, B.C.
V3H 1W3
(604) 461-3812 Mr. J. Rouma

Forest Fuels Inc.
7 Main Street
Keene, New Hampshire 03431
(603) 352-2865 Mr. J.C. Calhoun, Jr.

Gebruder Weiss, K.G.
c/o Herman Bogot & Co.
3142 N. Nottingham Avenue
Chicago, Illinois 60634
(312) 637-6037 Mr. R. Bogot

Guaranty Performance Co. Inc.
P.O. Box 230045
Tigard, Oregon 97223
(503) 639-3836 Mr. J. Westphal

Incinergy Systems Ltd.
402 West Pender Street
Vancouver, B.C.
(604) 684-6013 Mr. I.C. Campbell

Irvington-Moore Division
U.S. Natural Resources Inc.
P. O. Box 40666
Jacksonville, Florida 32203
(904) 354-2301 Mr. P.C. Perryman

Johnston Boiler Company
300 Pine Street
Ferrysburg, Michigan 49409
(616) 842-5050

Konus-Kessel
Robert Bosch Str. 3-5
D-6830 Schwetzingen
West Germany

Lamb-Cargate Industries Ltd.
P. O. Box 440
New Westminster, B.C.
V3L 4Y7
(604) 521-8821 Mr. F.H. Lamb

Lochhead-Haggerty Engineering & Mfg. Co. Ltd.
3904 Grant Street
Burnaby, B.C.
V5C 3N3
(604) 299-6265 Mr. L.P. Holmes, P. Eng.

Occidental Research Corp.
P. O. Box 19601
2100 S.E. Main Street
Irvine, Cal. 92713

Olivine Corp.
1015 Hilton
Bellingham, Washington 98225
(206) 733-3332 Mr. C.M. Smith

Peabody Gordon-Piatt
P. O. Box 650
Winfield, Kansas 67156

Local Distributor: Cal-Van Engineering Ltd.
3927 Grant Street
Burnaby, B.C.
(604) 291-7521 Mr. L. Walker

Ray Burner Company
1301 San Jose Avenue
San Francisco, California 94112
(415) 333-5800 Mr. R.W. Winskill

Salton Construction 19011 96th Avenue Surrey, B.C. (604) 576-8238	Mr. E. Salo
Sunbeam Equipment Corp. c/o Can-Eng Sales Ltd. P.O. Box 628 Niagara Falls, Ontario L2E 6V5 (416) 356-1327	Mr. A. Elliot
Tech-Air Corporation 2231 Perimeter Park Suite 16 Atlanta, Georgia 30041 (404) 458-9096	Mr. P.F. Van Keuren
Union Carbide Canada Ltd. 123 Eglinton Avenue East Toronto, Ontario M4P 1J3 (416) 487-1311	Mr. J.S. Johnston
U.S. Bureau of Mines c/o Bechtel National Inc. 2300 Liberty Street Albany, Oregon 97321 (503) 928-0940	Mr. E. Holerman
University of California at Davis Davis, California 95616 (916) 752-1421	Prof. J.R. Goss
Waycot Systems Limited 2940 Main Street Vancouver, B.C. V5T 3G3 (604) 876-6511	Mr. J. Strath Mr. G. Douglas
Wellons Inc. P. O. Box 381 Sherwood, Oregon 97140 (503) 625-6131	Mr. R.L. Nye
Westwood Polygas Ltd. 1444 Alberni Street Vancouver, B.C. V6G 1A1	Mr. Allen D. Fernie

Woodex
Bio-Solar Research & Development Corp.
310 Garfield Street
P. O. Box 762
Eugene, Oregon 97401
(503) 686-0765

Mr. R.W. Gunnerman

APPENDIX B

BIBLIOGRAPHY

(1) Bramhall, G. and S. McIntyre. private communication

(2) Bachrich, J., private communication

(3) Wengert, E.M. - U.S. Forest Products Lab. data

(4) Corder, S.E., "Energy Use in an Industrial Veneer Dryer", Forest Products Journal Vol. 26, p. 38, Sept. 1976

(5) Lane Plywood of Eugene, Oregon - private communication with H. Cleveland, Superintendent

(6) Zerbe, J., U.S. Forest Product Lab. data